Campagnolo®

PURE PERFORMANCE

2015

SPARE PARTS CATALOGUE

SERIE STERZO • HEADSET • STEUERSATZ • JEU DE DIRECTION

Record™ 1
Record™ Hiddenset™ 1-1/8" - 1-1/8" TTC™. 2
Record™ Threadless™ 1" - 1-1/8" 2

MOVIMENTO CENTRALE • BOTTOM BRACKET • INNENLAGER • JEU DE PEDALIER

Record™ Pista™ 3

GUARNITURA • CRANKSET • KETTENRADGARNITUR • PEDALIER

Super Record™ ULTRA-TORQUE™ Carbon 11s 4
Record™ ULTRA-TORQUE™ Carbon 11s 5
Chorus™ ULTRA-TORQUE™ Carbon 11s 6
Record™ Pista™ 7
Athena™ POWER-TORQUE™ Carbon 11s 8
Athena™ POWER-TORQUE™ CT™ Carbon 11s 9
Athena™ POWER-TORQUE™ 11s 10
Athena™ POWER-TORQUE™ CT™ 11s 11
Athena™ TRIPLE POWER-TORQUE™ 11s 12
Veloce™ POWER-TORQUE™ 10s 13
Veloce™ POWER-TORQUE™ CT™ 10s 14
COMP ULTRA™ OVER TORQUE™ 11s. 15
COMP ULTRA™ OVER TORQUE™ CT 11s 16
COMP ONE™ OVER TORQUE™ 11s 17
COMP ONE™ OVER TORQUE™ CT 11s 18
Super Record™ ULTRA-TORQUE™ Carbon 11s MY 2011-2014. 19
Record™ ULTRA-TORQUE™ Carbon 11s MY 2011-2014 20
Chorus™ ULTRA-TORQUE™ Carbon 11s MY 2011-2014 21

CAMBIO • REAR DERAILLEUR • SCHALTUNG • DERAILLEUR ARRIERE

Super Record™ EPS™ 11s. 22
Record™ EPS™ 11s 22
Chorus™ EPS™ 11s 23
Super Record™ 11s 24
Record™ 11s 25
Chorus™ 11s 26
Athena™ - Athena™ TRIPLE 11s 27
Veloce™ 10s 28
Super Record™ 11s MY 2011-2014 29
Record™ 11s MY 2011-2014 30
Chorus™ 11s MY 2011-2014 31

DERAGLIATORE • FRONT DERAILLEUR • UMWERFER • DERAILLEUR AVANT

Super Record™ EPS™ 11s. 32
Record™ EPS™ 11s 32
Chorus™ EPS™ 11s 32
Super Record™ 11s 33
Record™ 11s 34
Chorus™ 11s 35
Athena™ - Athena™ TRIPLE 11s 36
Veloce™ 10s 37
Super Record™ 11s MY 2011-2014 38
Record™ 11s MY 2011-2014 39
Chorus™ 11s MY 2011-2014 40

ERGOPOWER™ CONTROL LEVERS

Super Record™ EPS™ 11s. 41
Record™ EPS™ 11s 42

ERGOPOWER™ CONTROL LEVERS

Chorus™ EPS™ 11s . . . 43
Super Record™ Ultra-Shift™ 11s . . . 44
Record™ Ultra-Shift™ 11s . . . 45
Chorus™ Ultra-Shift™ 11s . . . 46
Athena™ Power-Shift™ 11s . . . 47
Athena™ TRIPLE Power-Shift™ 11s . . . 48
Veloce™ Power-Shift™ 10s . . . 49
ESCAPE™ All versions . . . 50
Record™ QS™ 10s . . . 51
Chorus™ QS™ 10s . . . 52

ERGOPOWER™ FLAT-BAR CONTROL LEVERS

Veloce™ FB 10s x 2 . . . 53

FRENI • BRAKES • BREMSEN • FREINS

Super Record™ SKELETON™ . . . 54
Record™ SKELETON™ . . . 55
Chorus™ SKELETON™ . . . 56
Campagnolo® SKELETON™ . . . 57
Veloce™ . . . 58

TT COMPONENTS

EPS Bar-End shifting levers 10s / 11s . . . 59
EPS Bar-End brake levers . . . 60
Bar-End shifting levers 10s / 11s . . . 61
Bar-End brake levers . . . 62
Front brake . . . 63
Rear brakes . . . 64

MOZZI • HUBS • NABEN • MOYEUX

Record™ front hub 65
Record™ rear hub 66
Record™ Pista™ front hub 67
Record™ Pista™ rear hub 67

PIGNONI • SPROCKETS • RITZEL • CASSETTES

Lockrings / Ghiere 68
Super Record™ 11s 69
Record™ 11s 71
Chorus™ 11s 73
Centaur™ UD™ 10s (Veloce™ UD™ 10s compatible) 75
Ghibli™ 77

PEDALI • PEDALS • PEDALE • PEDALES

Spares 78

CAVI E GUAINE • CABLES AND CASINGS • KABEL UND HÜLLEN • CABLES ET GAINES

Complete sets & single parts 80

RUOTE • WHEELS • LAUFRÄDER • ROUES

Bora™ Ultra™ 80 tubular 82
Bora™ Ultra™ 50 tubular 84
Bora™ Ultra™ 35 tubular 86
Bora™ Ultra™ 50 clincher 88
Bora™ Ultra™ 35 clincher 90
Bora™ One 50 tubular 92
Bora™ One 35 tubular 94
Bora™ One 50 clincher 96

Bora™ One 35 clincher . . . 98
Hyperon™ Ultra™ Two tubular . . . 100
Hyperon™ Ultra™ Two clincher . . . 102
Bullet™ Ultra™ H50 clincher . . . 104
Bullet™ Ultra™ H80 clincher . . . 107
Bullet™ H50 clincher . . . 110
Bullet™ H80 clincher . . . 112
Shamal™ Mille™ clincher . . . 114
Shamal™ Ultra™ 2-Way fit™ . . . 116
Shamal™ Ultra™ clincher . . . 118
Shamal™ Ultra™ tubular . . . 120
Eurus™ 2-Way fit™ . . . 122
Eurus™ clincher . . . 124
Zonda™ 2-Way fit™ . . . 126
Zonda™ clincher . . . 128
Scirocco™ 35 clincher . . . 130
Vento™ Asymmetric™ G3™ clincher . . . 132
Khamsin™ Asymmetric™ clincher . . . 134
Khamsin™ Asymmetric™ G3™ clincher . . . 136
Neutron™ Ultra™ clincher . . . 138
Scirocco™ 35 CX clincher . . . 140
Khamsin™ Asymmetric™ CX clincher . . . 142
Pista™ tubular . . . 144
Bora™ Ultra™ TT tubular . . . 146
Ghibli™ tubular . . . 147
Quick-releases . . . 148
Valve extensions . . . 149
Brake pads compatibility . . . 150

UTENSILI • TOOLS • WERKZEUGE • OUTILS

Tools 151

CAVATAPPI • CORKSCREWS • KORKENZIEHER • TIRE-BOUCHONS

BIG™ 163

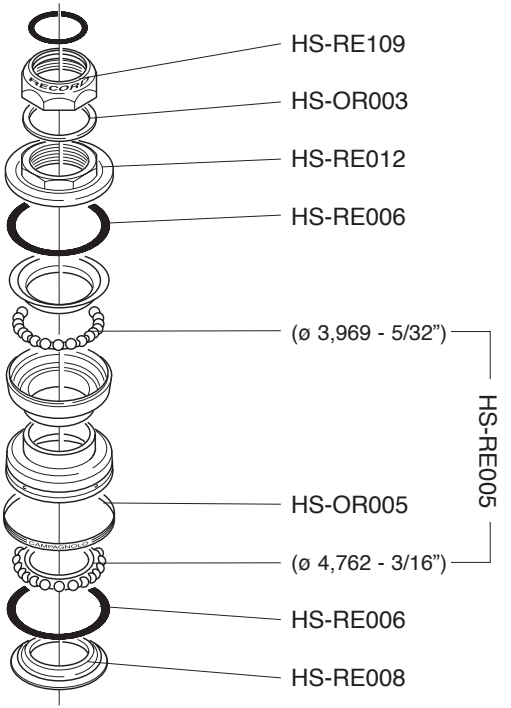
HS-RE109
HS-OR003
HS-RE012
HS-RE006
(ø 3,969 - 5/32”)
HS-RE005
HS-OR005
(ø 4,762 - 3/16”)
HS-RE006
HS-RE008

RECORD HIDDENSET / RECORD HIDDENSET TTC / RECORD THREADLESS

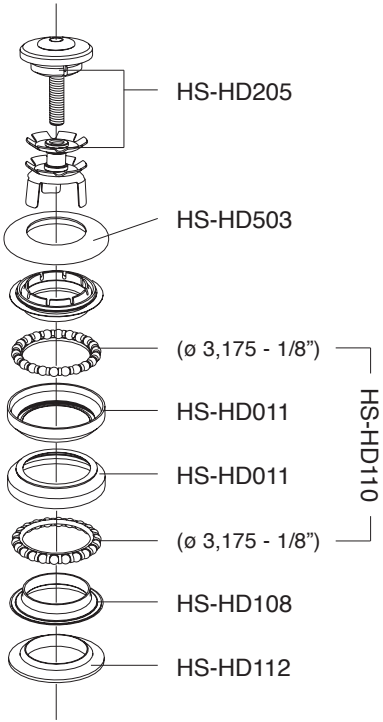

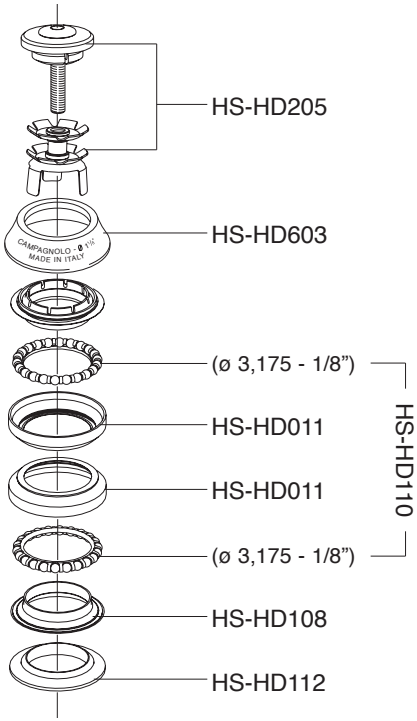

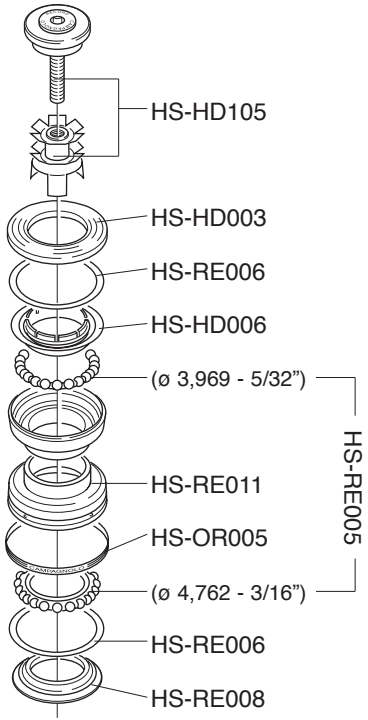

RECORD PISTA

111mm

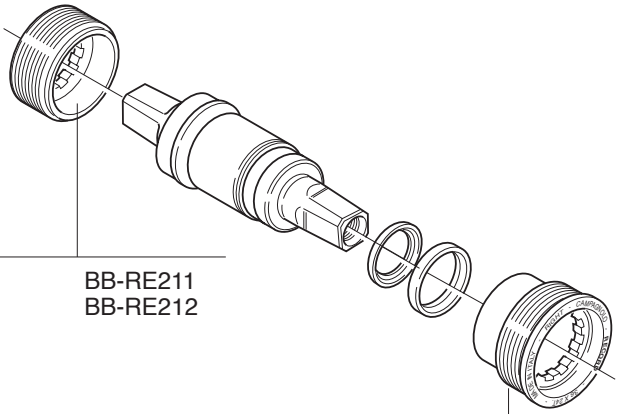

Italian: BB-RE211
English: BB-RE212

Italian: BB-RE213
English: BB-RE214

SUPER RECORD 11S

CARBON - ULTRA-TORQUE

FC-SR300 **KIT VITI / SCREWS&NUTS**

B	**170 mm** **172,5 mm** **175 mm**	**FC-SR081** **FC-SR083** **FC-SR085**
C	**Z34** **Z36** **Z39**	**FC-SR234** **FC-SR136** **FC-SR239**
D	**Z50 for 34** **Z52 for 36** **Z53 for 39**	**FC-SR350** **FC-SR352** **FC-SR353**

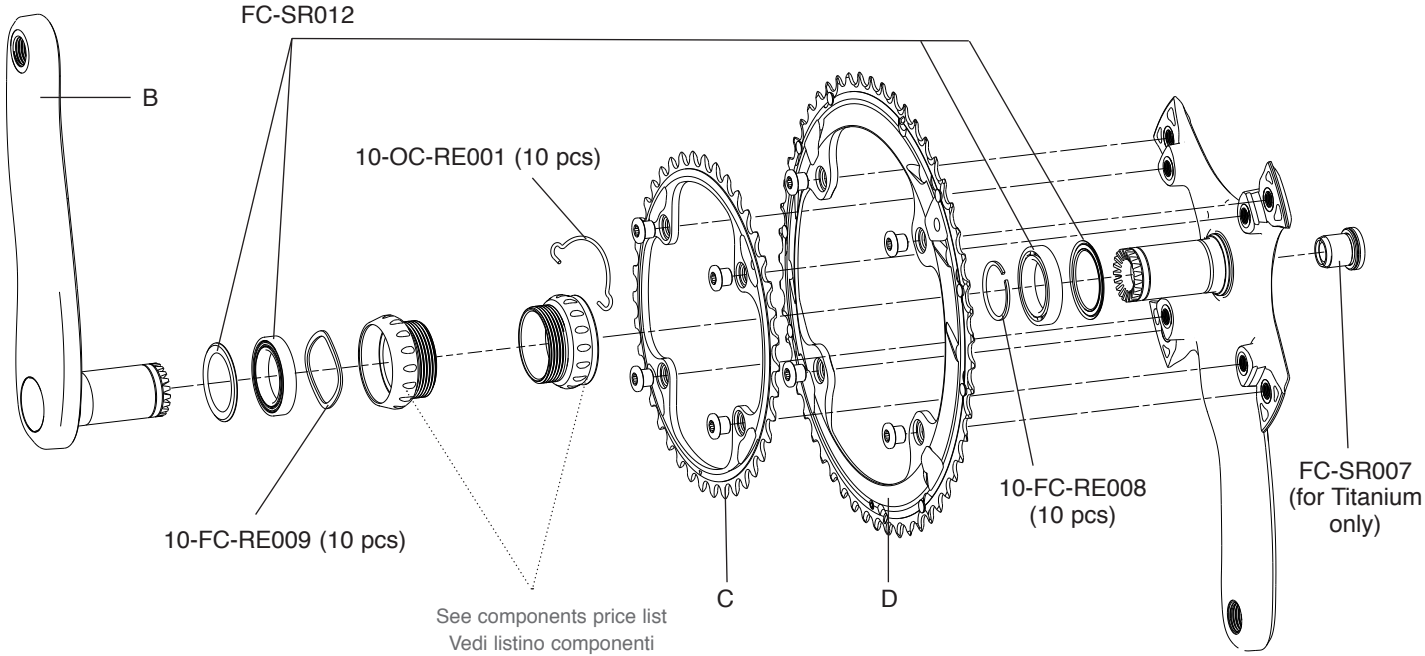

FC-SR300 KIT VITI / SCREWS&NUTS

B	170 mm 172,5 mm 175 mm	FC-RE087 FC-RE089 FC-RE091
C	Z34 Z36 Z39	FC-SR234 FC-SR136 FC-SR239
D	Z50 for 34 Z52 for 36 Z53 for 39	FC-SR350 FC-SR352 FC-SR353

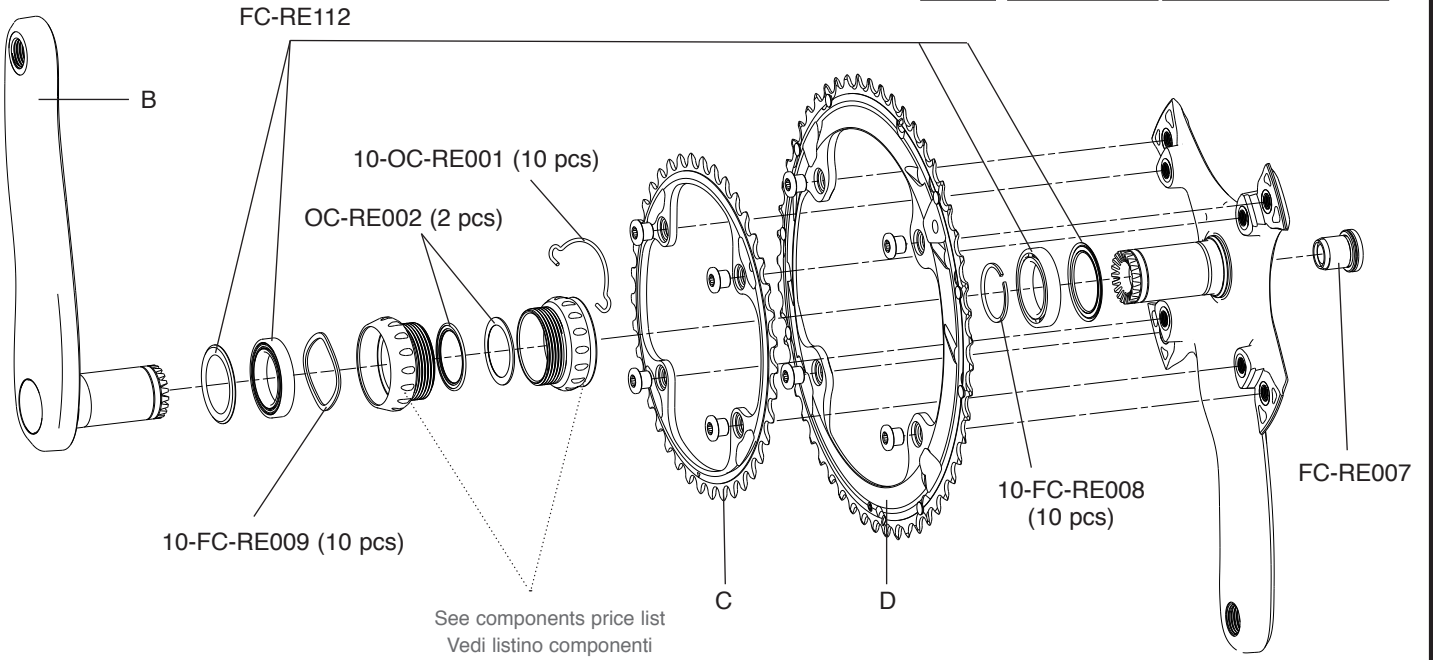

CHORUS 11S

CARBON - ULTRA-TORQUE

FC-SR300 KIT VITI / SCREWS&NUTS

B	170 mm 172,5 mm 175 mm	FC-CH113 FC-CH115 FC-CH117
C	Z34 Z36 Z39	FC-SR234 FC-SR136 FC-SR239
D	Z50 for 34 Z52 for 36 Z53 for 39	FC-SR350 FC-SR352 FC-SR353

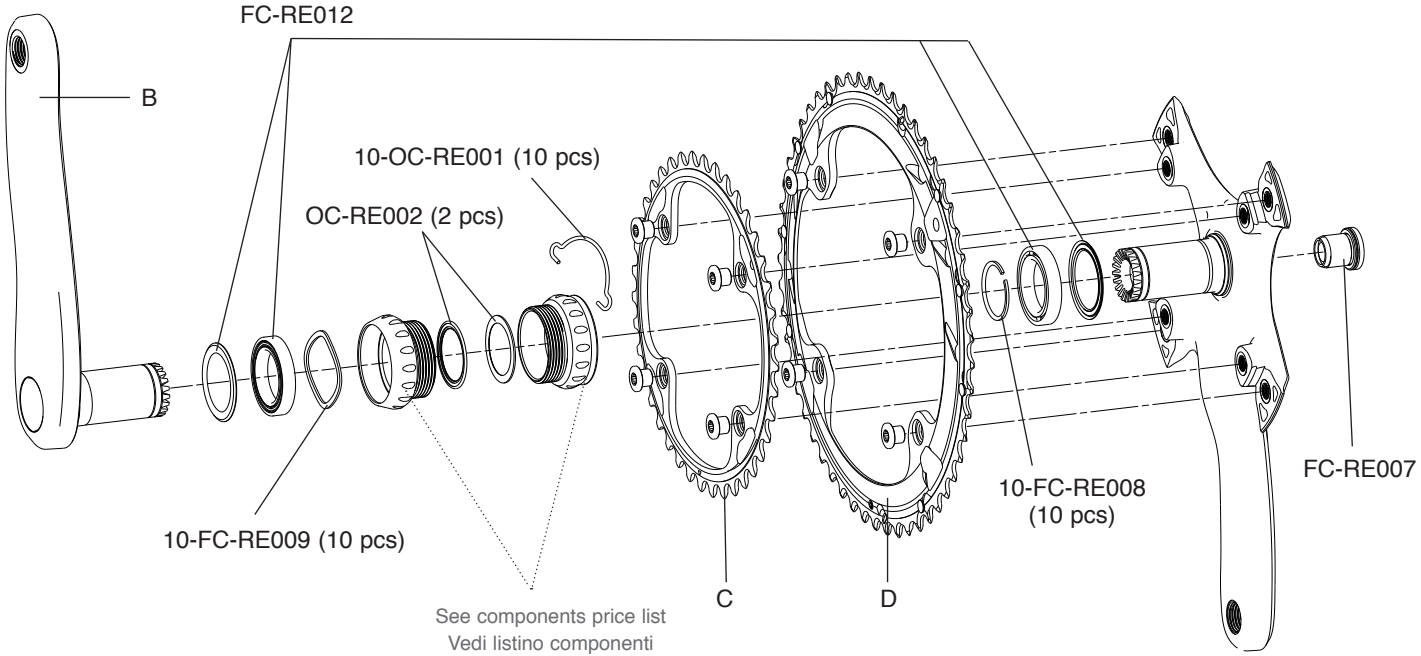

RECORD PISTA

ALUMINIUM

C	Z47	FC-PI047
	Z48	FC-PI048
	Z49	FC-PI049
	Z50	FC-PI050
	Z51	FC-PI051
	Z52	FC-PI052

FC-PI100
KIT VITI / SCREWS&NUTS

5 U + 5 V

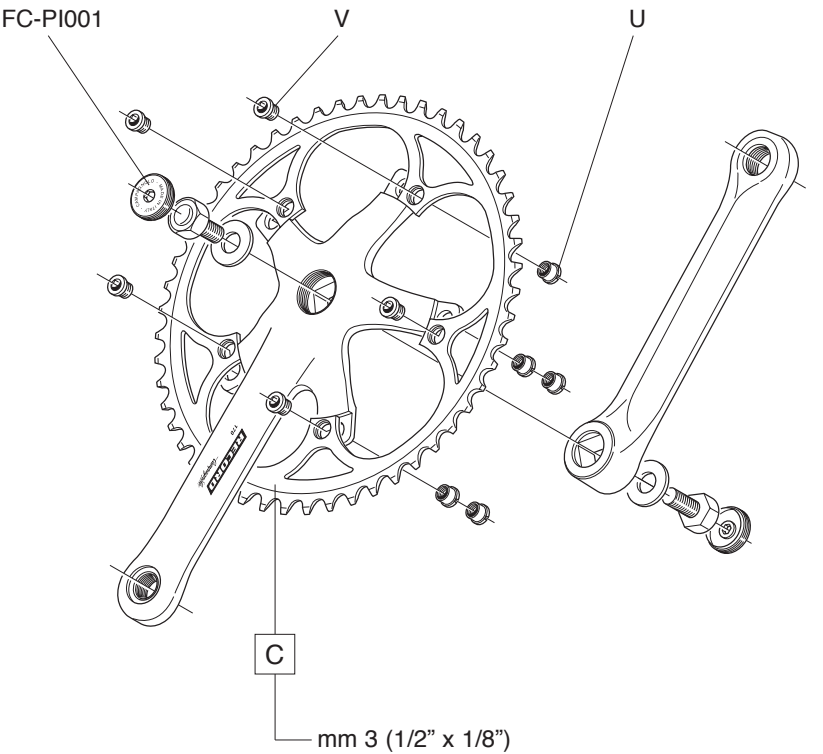

FC-AT300
KIT VITI / SCREWS&NUTS
4 DA + 4 DB + 1 DC + 1 DD

B	**165 mm** **170 mm** **172,5 mm** **175 mm**	**FC-AT165C** **FC-AT763** **FC-AT765** **FC-AT767**
C	**Z39**	**FC-AT139**
D	**Z53 for 39**	**FC-AT753B**

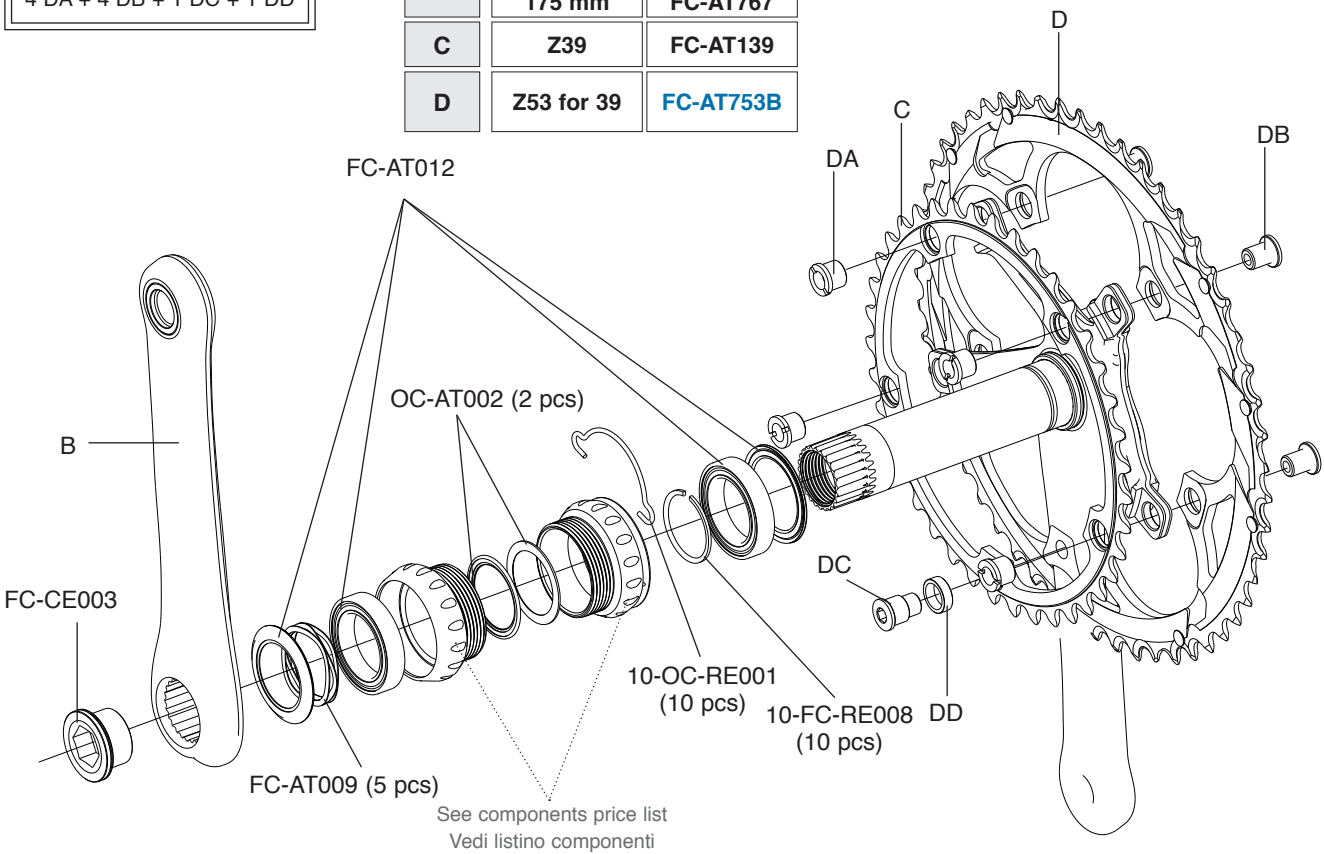

ATHENA 11S CT

B	165mm 170 mm 172,5 mm 175 mm	FC-AT165C FC-AT763 FC-AT765 FC-AT767
C	Z34 Z36	FC-AT134 FC-AT036
D	Z50 for 34 Z52 for 36	FC-AT650B FC-AT952B

FC-AT300
KIT VITI / SCREWS&NUTS
4 DA + 4 DB + 1 DC + 1 DD

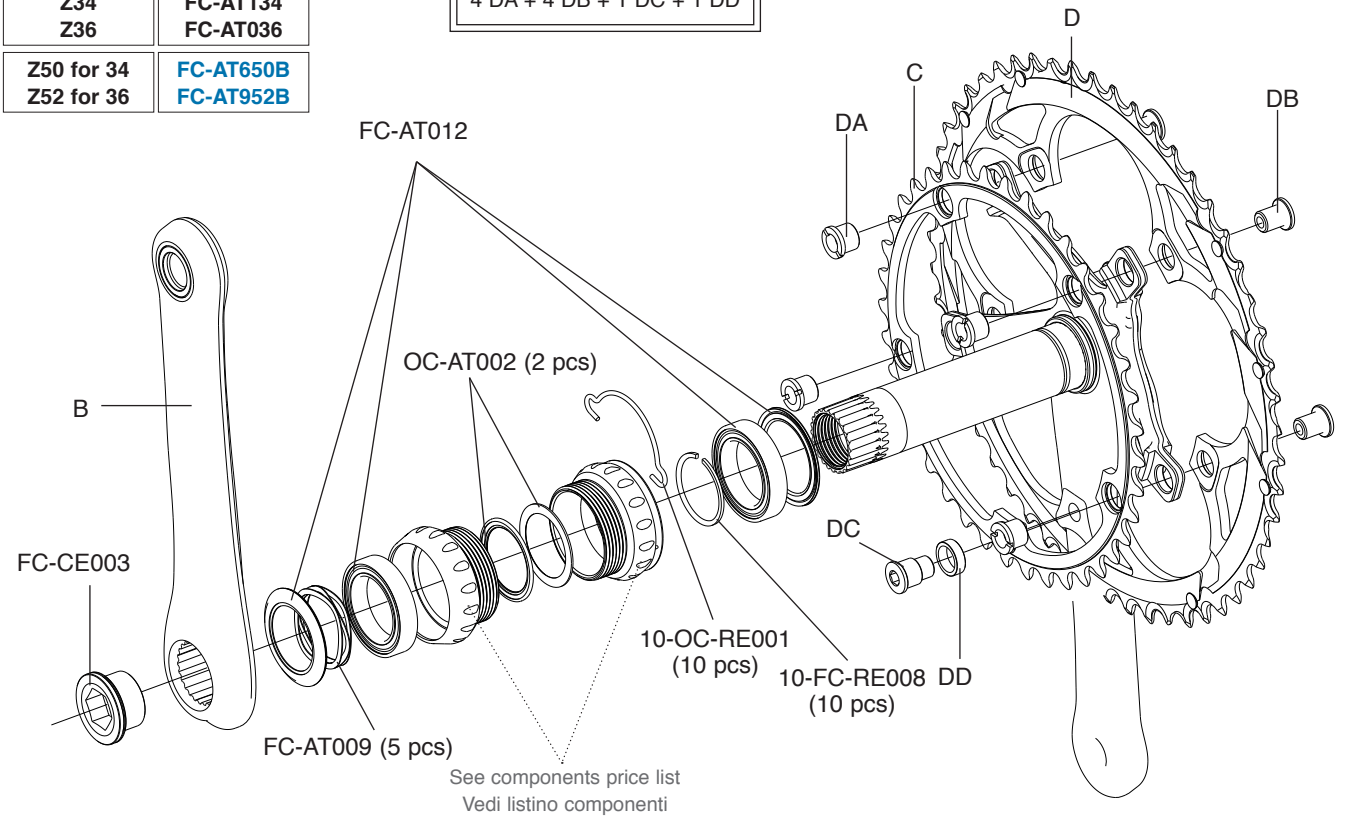

ATHENA 11S

		SILVER	BLACK
C	Z39	FC-AT239	FC-AT139
D	Z53 for 39	FC-AT453S	FC-AT753B

FC-AT200 (SILVER) - FC-AT200B (BLACK)
KIT VITI / SCREWS&NUTS

4 DA + 4 DB + 1 DC + 1 DD

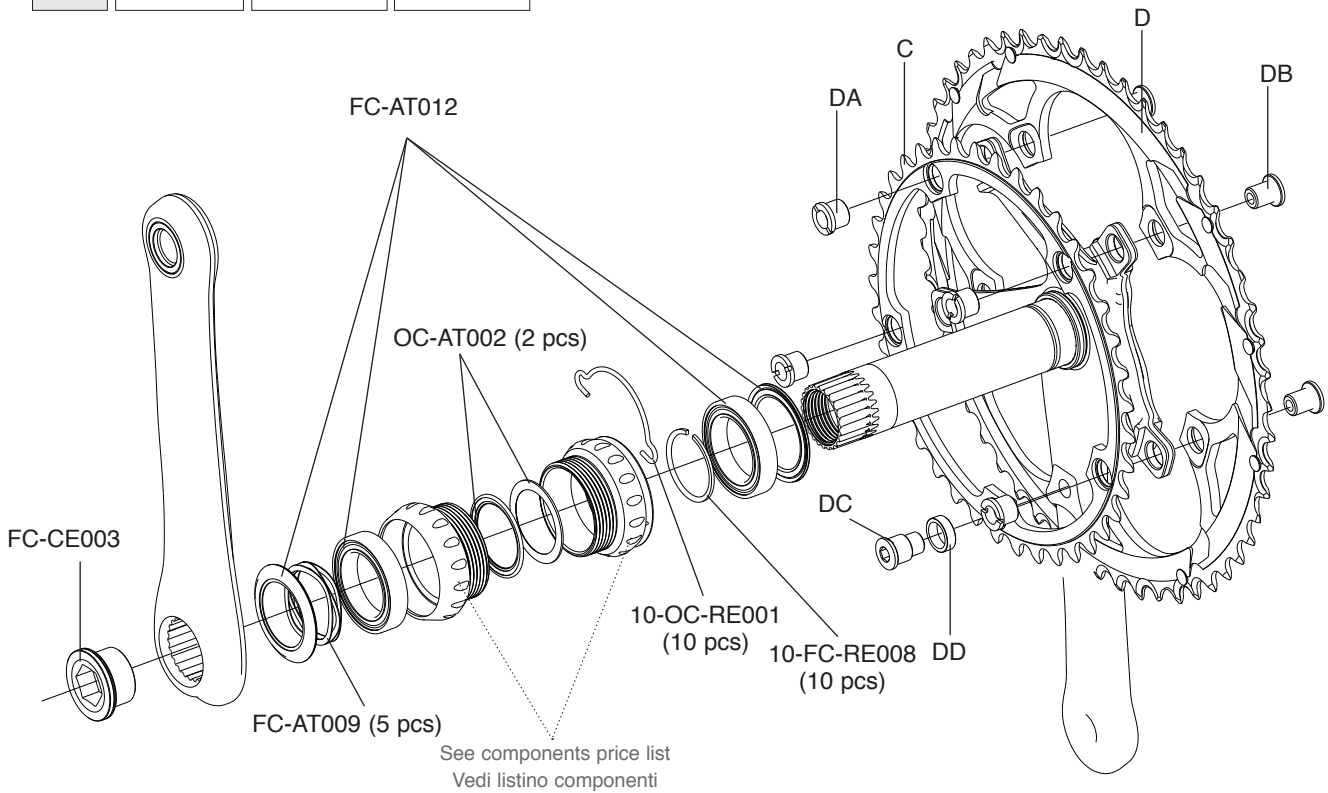

ATHENA 11S CT

		SILVER	BLACK
C	Z34 Z36	FC-AT234 not available	FC-AT134 FC-AT036
D	Z50 for 34 Z52 for 36	FC-AT650S not available	FC-AT650B FC-AT952B

FC-AT200 (SILVER) - FC-AT200B (BLACK)
KIT VITI / SCREWS&NUTS

4 DA + 4 DB + 1 DC + 1 DD

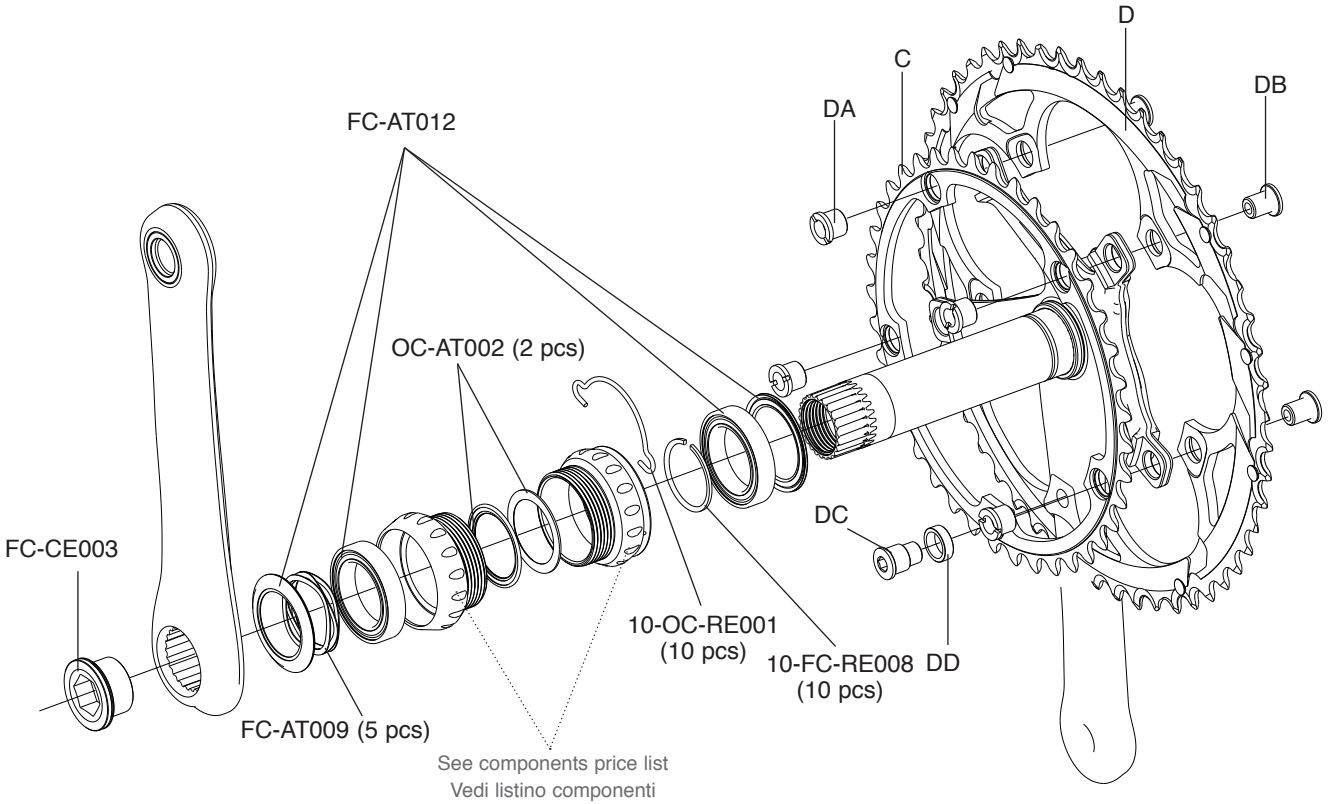

ATHENA TRIPLE 11S

		SILVER	BLACK
C	Z30	FC-ATS030	FC-ATB030
D	Z39	FC-ATS039	FC-ATB039
E	Z52	FC-ATS052	FC-ATB052

FC-AT400 (BLACK/SILVER)
KIT VITI / SCREWS&NUTS

9 AA + 6 AC + 1 AB

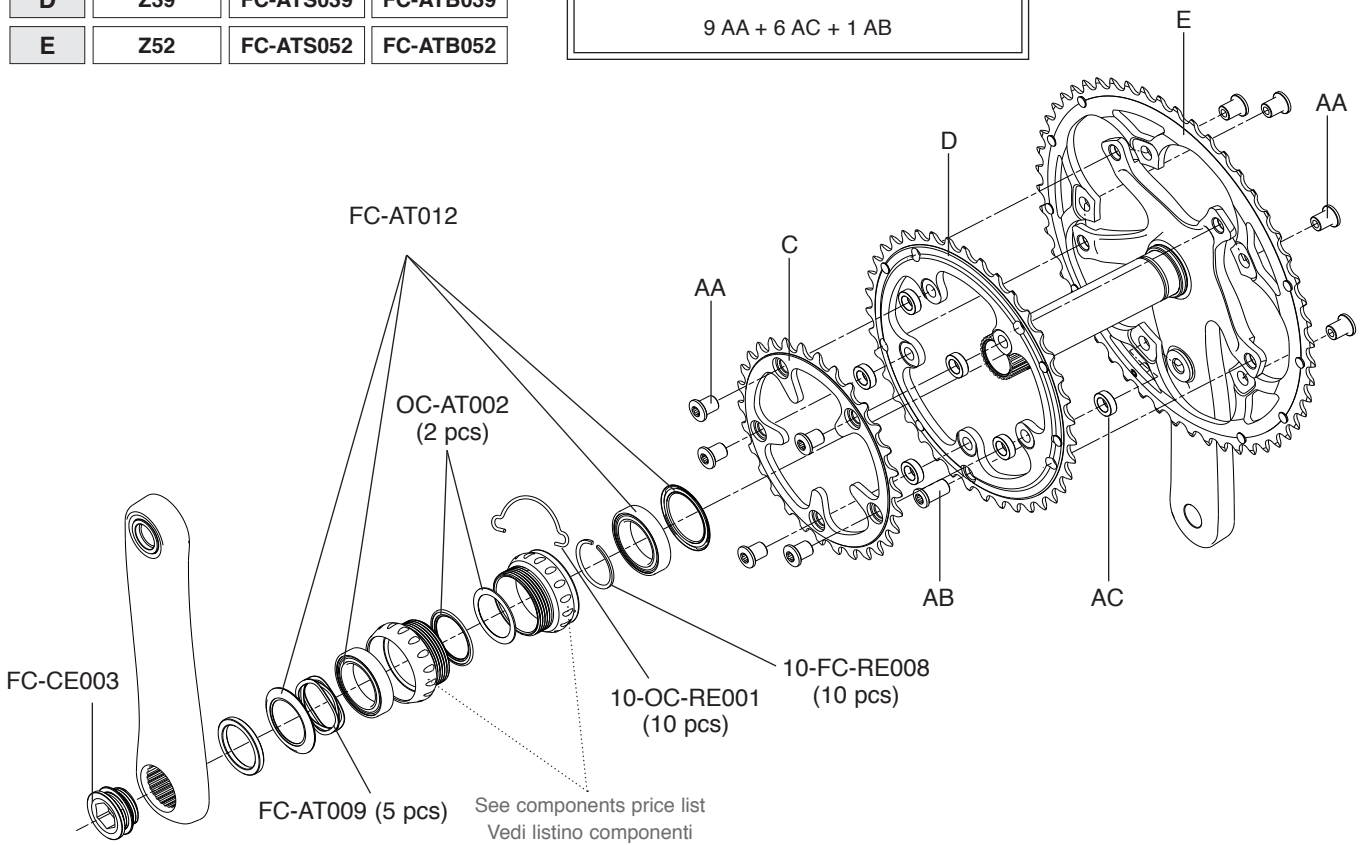

VELOCE 10S

		BLACK	SILVER
C	Z39	FC-VL339	FC-VL439
D	Z52 for 39 Z53 for 39	FC-CE252 FC-CE253	FC-VL652 FC-VL553

FC-VL200
KIT VITI / SCREWS&NUTS
4 DA + 4 DB + 1 DC + 1 DD

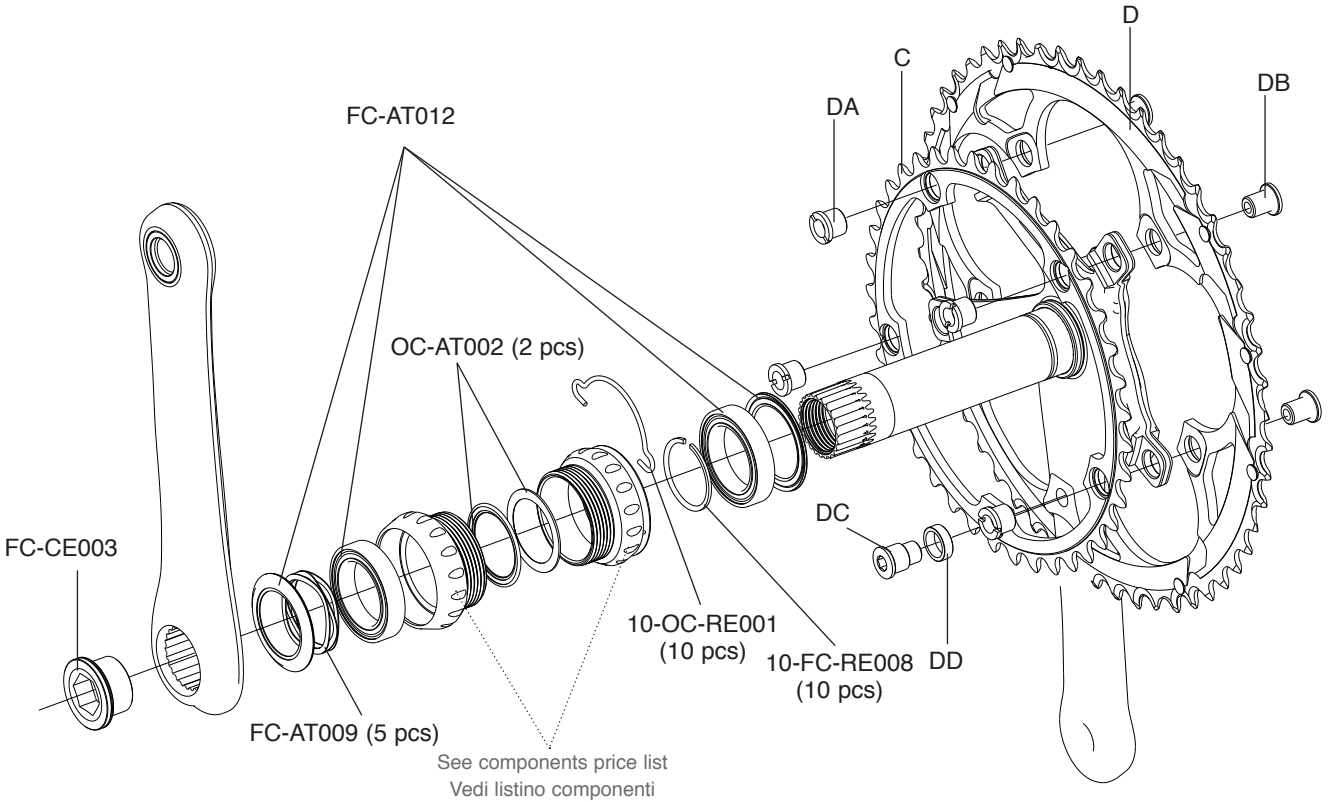

VELOCE 10S CT

ALUMINIUM - POWER-TORQUE

		BLACK	SILVER
C	Z34	FC-VL434	FC-VL534
D	Z50 for 34	FC-CE450	FC-VL450

FC-VL200
KIT VITI / SCREWS&NUTS
4 DA + 4 DB + 1 DC + 1 DD

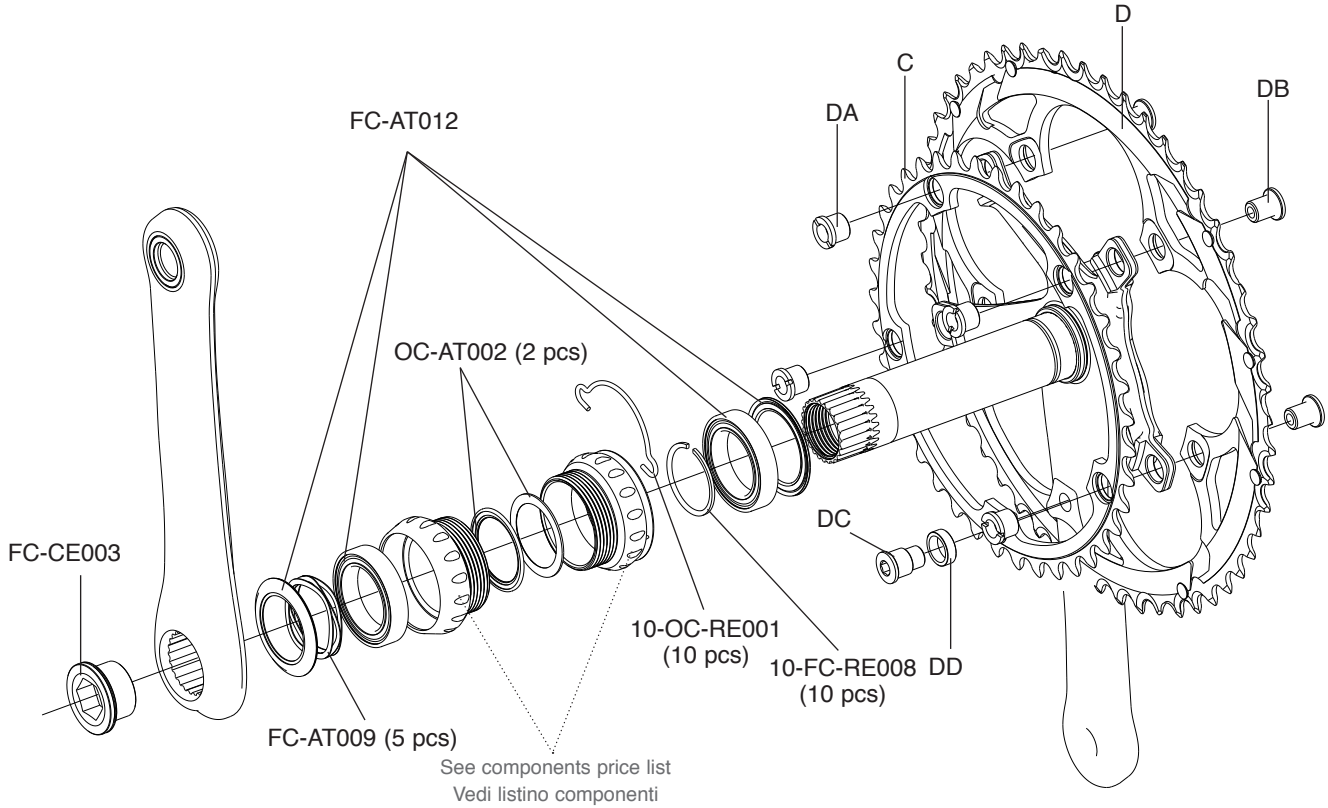

COMP ULTRA 11S

B	**170 mm 172,5 mm 175 mm**	**FC-COU031 FC-COU033 FC-COU035**
C	**Z39**	**FC-SR139***
D	**Z53 for 39**	**FC-CO053***

FC-SR200
KIT VITI / SCREWS&NUTS

4 AA + 1 AB + 1 AC

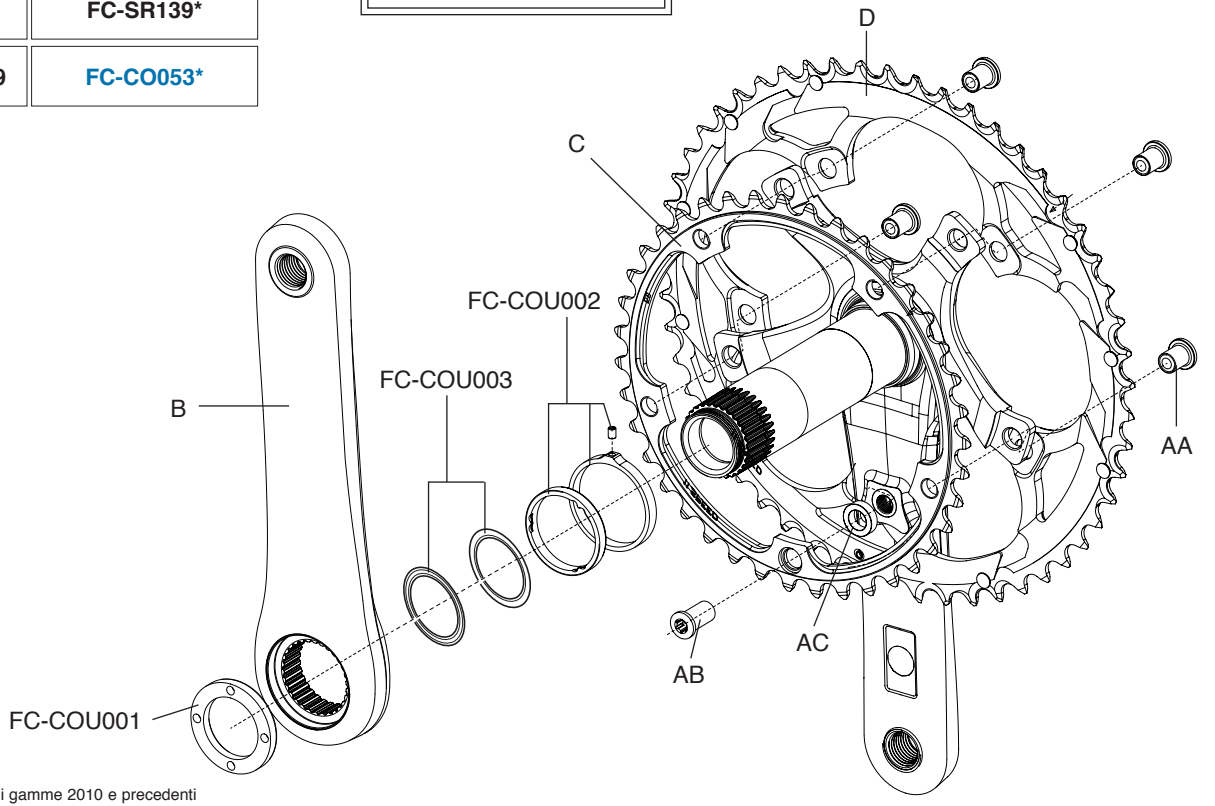

* non compatibili con ingranaggi di gamme 2010 e precedenti

* not compatible with 2010 range and previous chainrings

COMP ULTRA 11S CT

CARBON - OVER-TORQUE

B	170 mm 172,5 mm 175 mm	FC-COU031 FC-COU033 FC-COU035
C	Z34 Z36	FC-SR134* FC-SR036*
D	Z50 for 34 Z52 for 36	FC-CO050* FC-CO052*

* non compatibili con ingranaggi di gamme 2010 e precedenti

* not compatible with 2010 range and previous chainrings

FC-SR200
KIT VITI / SCREWS&NUTS

4 AA + 1 AB + 1 AC

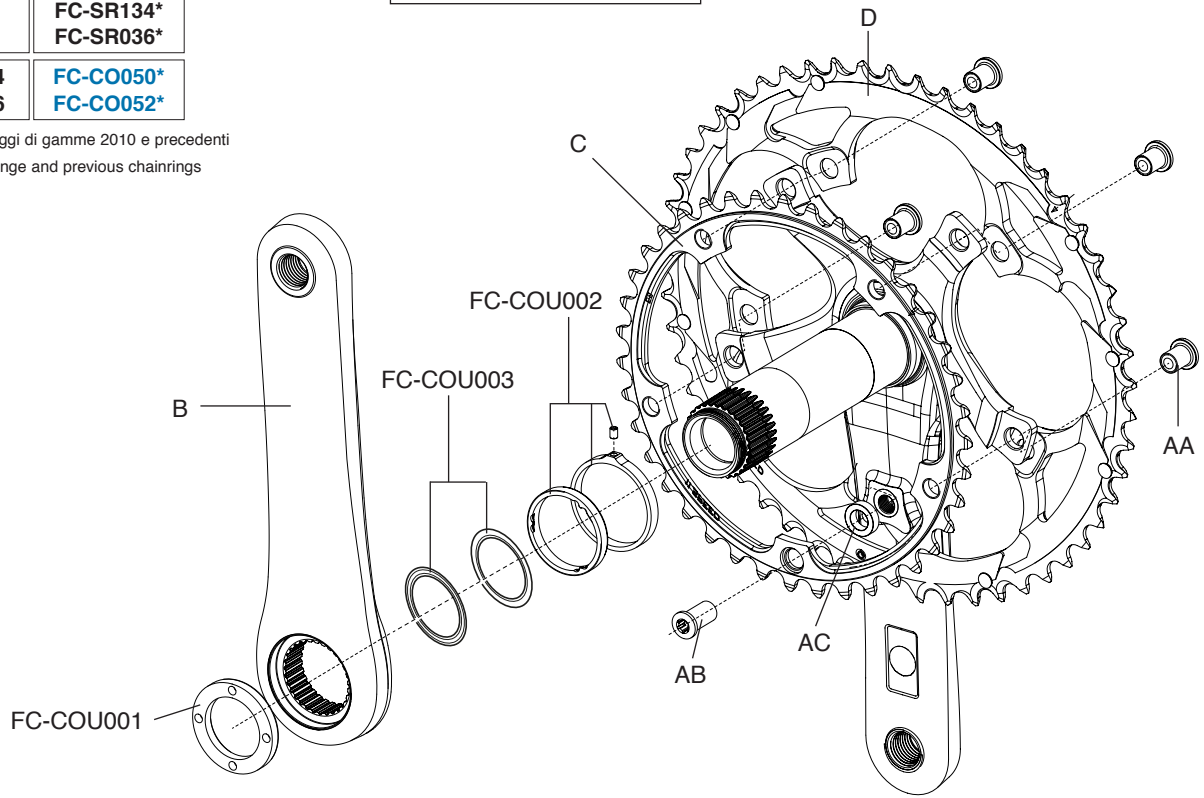

COMP ONE 11S

B	**170 mm 172,5 mm 175 mm**	**FC-CO1011 FC-CO1013 FC-CO1015**
C	**Z39**	**FC-SR139***
D	**Z53 for 39**	**FC-CO053***

FC-SR200
KIT VITI / SCREWS&NUTS

4 AA + 1 AB + 1 AC

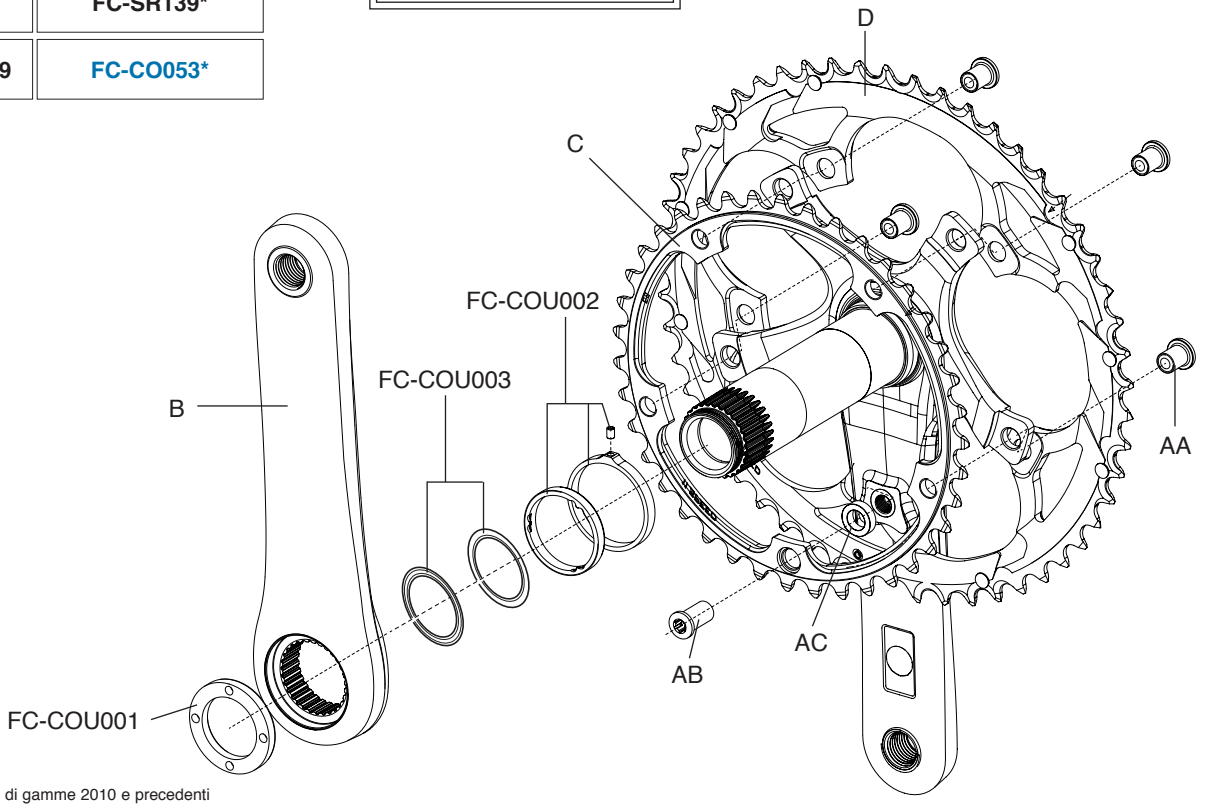

* non compatibili con ingranaggi di gamme 2010 e precedenti

* not compatible with 2010 range and previous chainrings

COMP ONE 11S CT

CARBON - OVER-TORQUE

B	170 mm 172,5 mm 175 mm	FC-CO1011 FC-CO1013 FC-CO1015
C	Z34 Z36	FC-SR134* FC-SR036*
D	Z50 for 34 Z52 for 36	FC-CO050* FC-CO052*

* non compatibili con ingranaggi di gamme 2010 e precedenti

* not compatible with 2010 range and previous chainrings

FC-SR200
KIT VITI / SCREWS&NUTS

4 AA + 1 AB + 1 AC

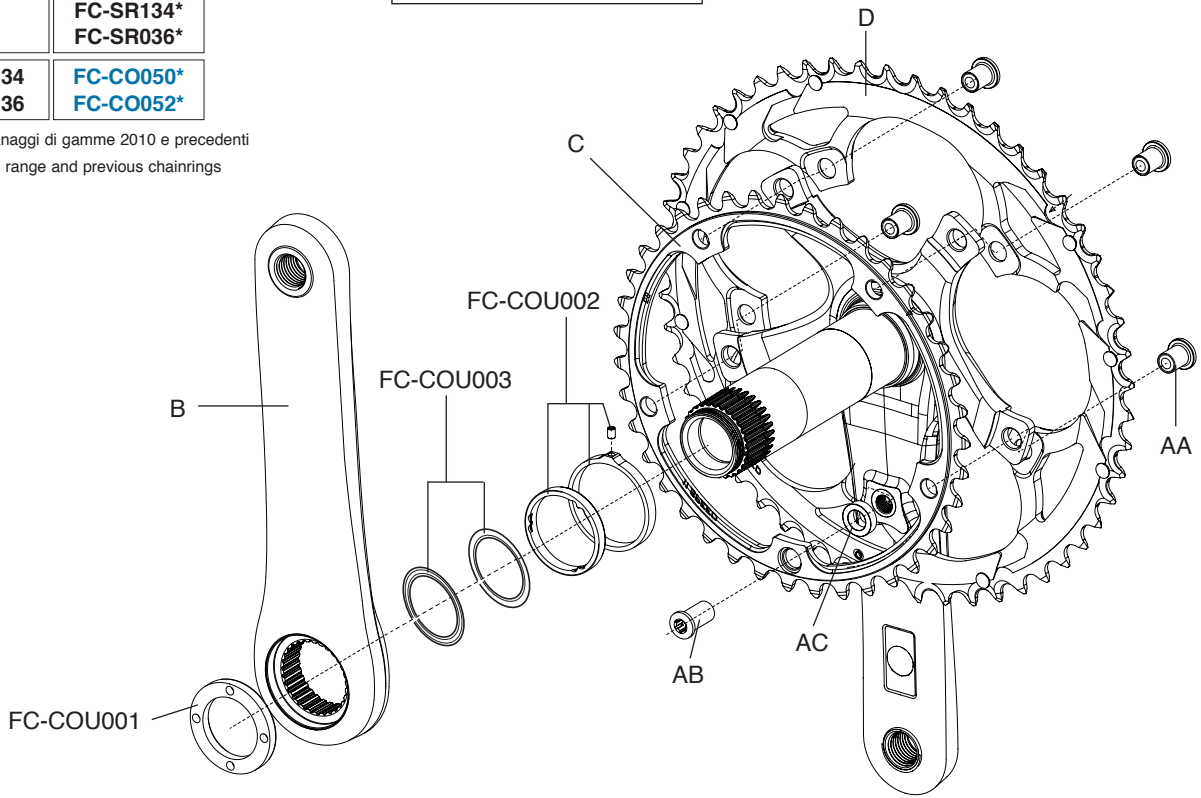

SUPER RECORD 11S MY 2011 - 2014

CARBON - ULTRA-TORQUE

B	**170 mm** **172,5 mm** **175 mm**	**FC-SR601** **FC-SR603** **FC-SR605**
C	**Z34** **Z36** **Z39** **Z42**	**FC-SR134*** **FC-SR036*** **FC-SR139*** **FC-SR042***
D	**Z50 for 34** **Z52 for 36** **Z52 for 39** **Z53 for 39** **Z54 for 42** **Z55 for 42**	**FC-CO050*** **FC-CO052*** **FC-SR152*** **FC-CO053*** **FC-SR054*** **FC-SR055***

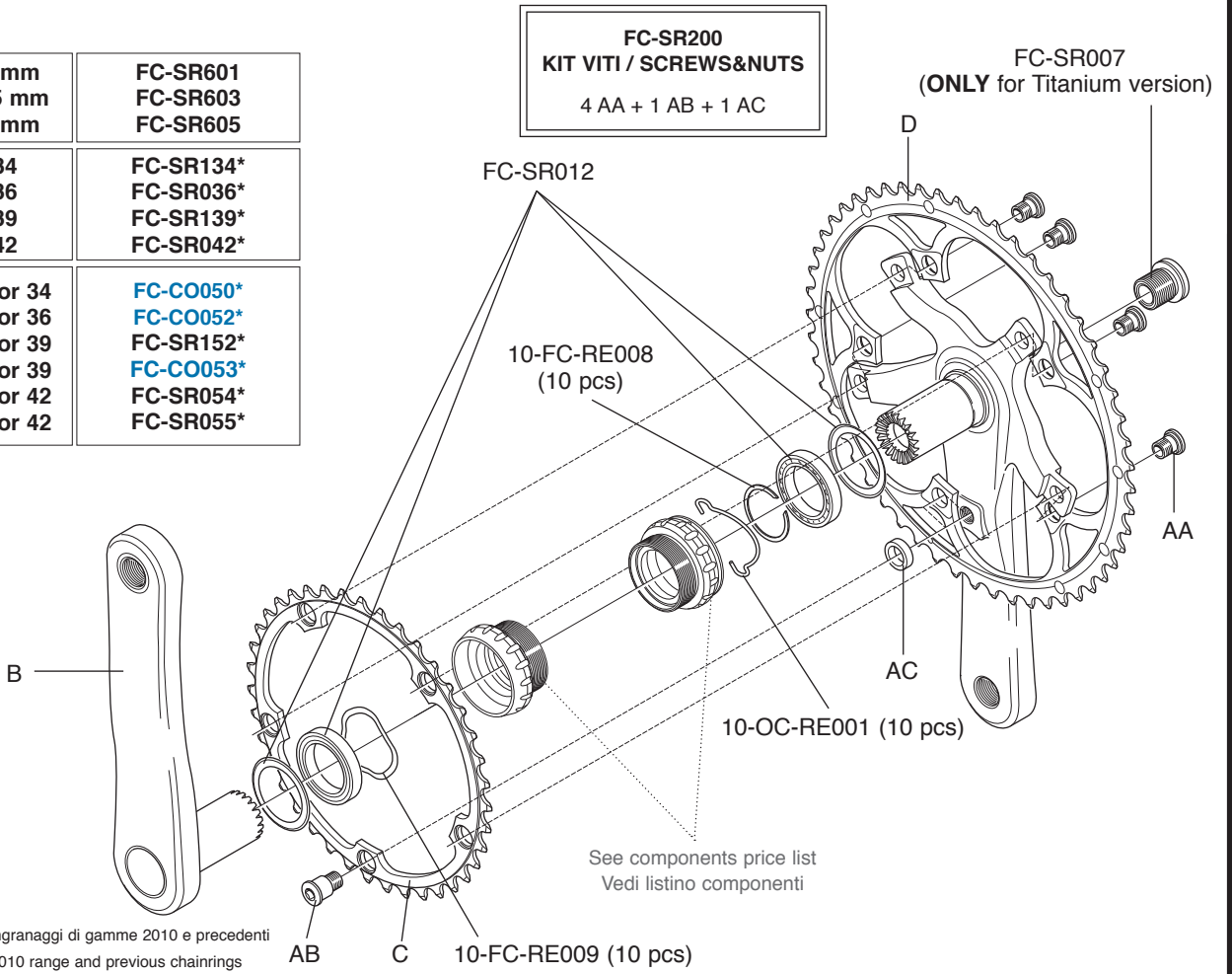

* non compatibili con ingranaggi di gamme 2010 e precedenti

* not compatible with 2010 range and previous chainrings

RECORD 11S MY 2011 - 2014

CARBON - ULTRA-TORQUE

B	170 mm 172,5 mm 175 mm	FC-RE731 FC-RE733 FC-RE735
C	Z34 Z36 Z39 Z42	FC-SR134* FC-SR036* FC-SR139* FC-SR042*
D	Z50 for 34 Z52 for 36 Z52 for 39 Z53 for 39 Z54 for 42 Z55 for 42	FC-CO050* FC-CO052* FC-SR152* FC-CO053* FC-SR054* FC-SR055*

FC-SR200
KIT VITI / SCREWS&NUTS
4 AA + 1 AB + 1 AC

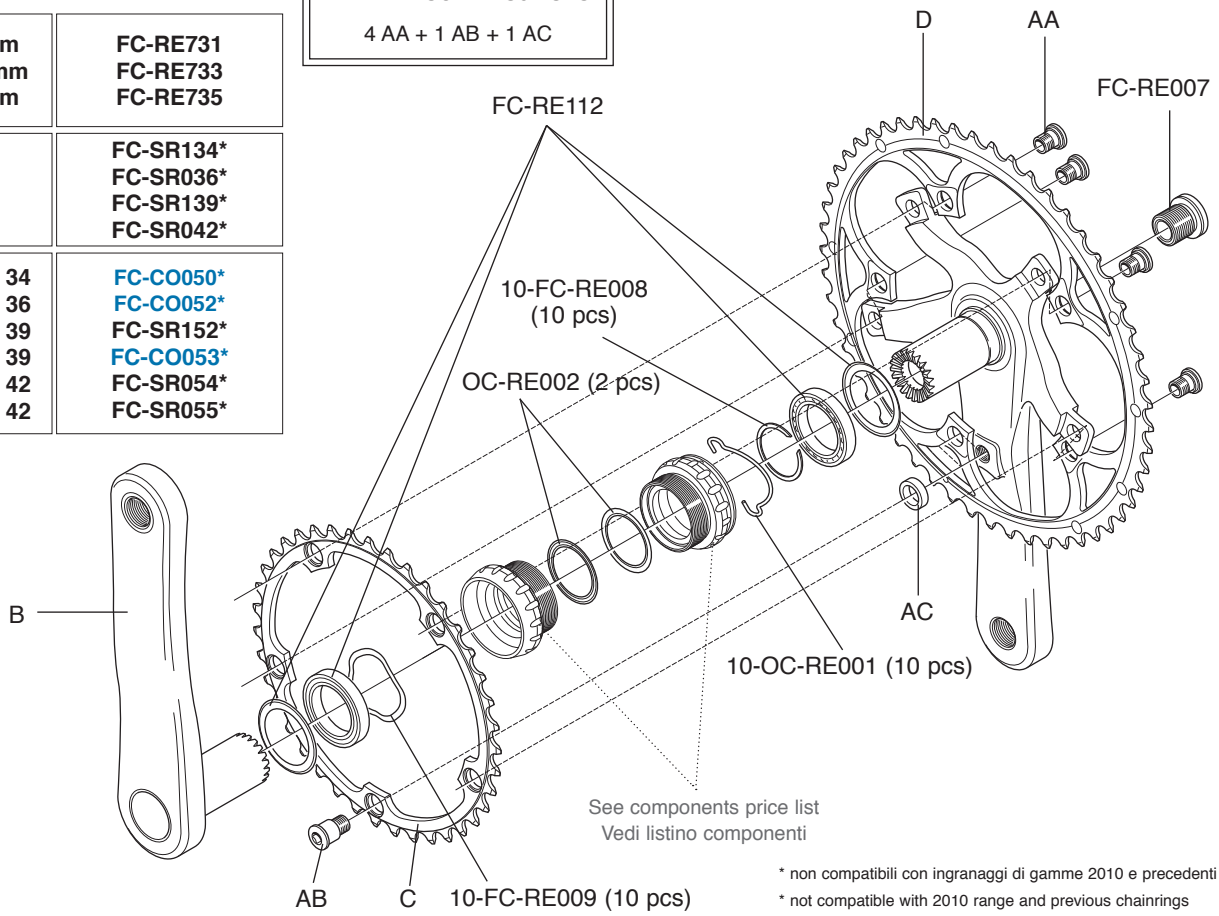

* non compatibili con ingranaggi di gamme 2010 e precedenti

* not compatible with 2010 range and previous chainrings

CHORUS 11S MY 2011 - 2014

B	170 mm 172,5 mm 175 mm	FC-CH751 FC-CH753 FC-CH755
C	Z34 Z36 Z39 Z42	FC-SR134* FC-SR036* FC-SR139* FC-SR042*
D	Z50 for 34 Z52 for 36 Z52 for 39 Z53 for 39 Z54 for 42 Z55 for 42	FC-CO050* FC-CO052* FC-SR152* FC-CO053* FC-SR054* FC-SR055*

FC-SR200
KIT VITI / SCREWS&NUTS
4 AA + 1 AB + 1 AC

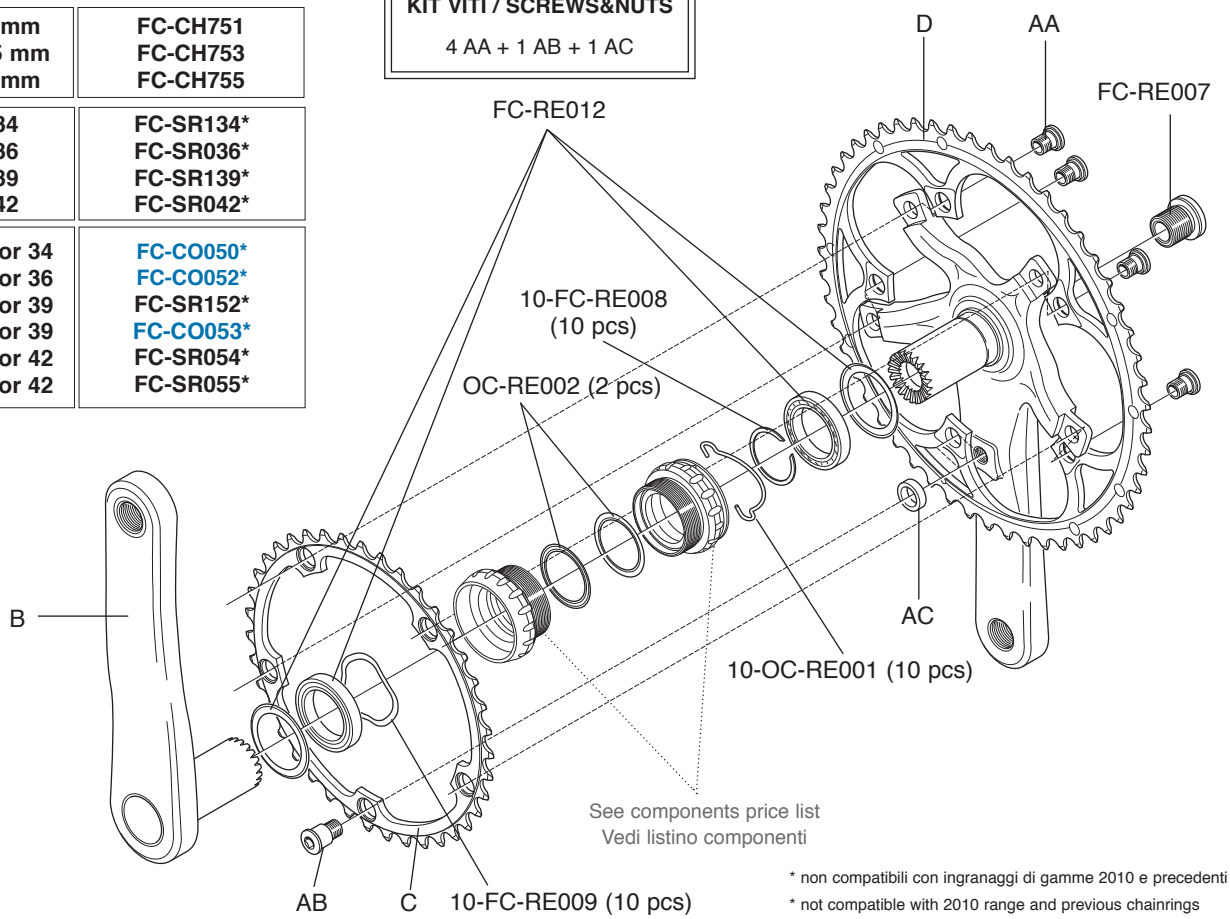

* non compatibili con ingranaggi di gamme 2010 e precedenti

* not compatible with 2010 range and previous chainrings

SUPER RECORD EPS / RECORD EPS

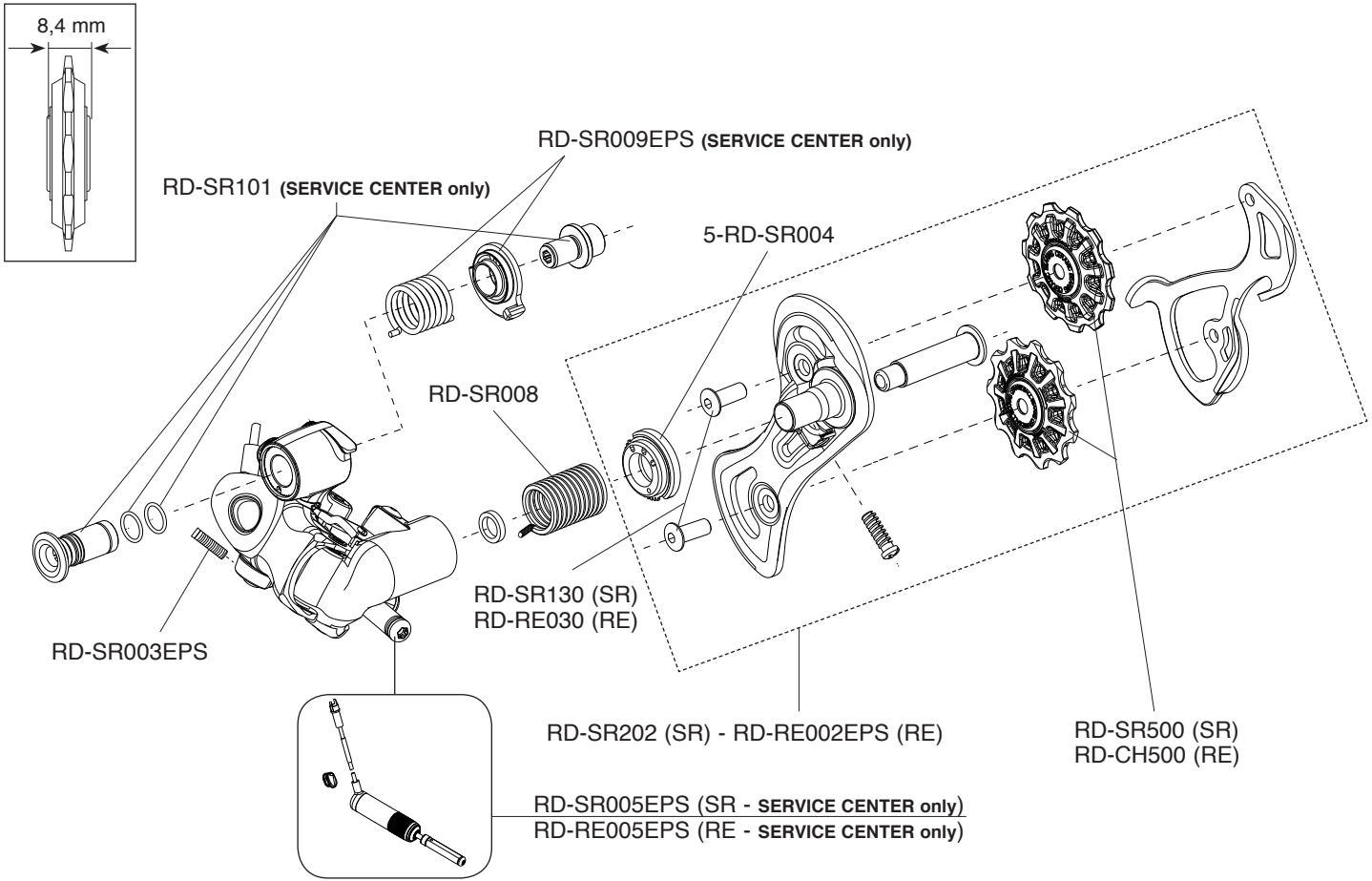

CHORUS EPS

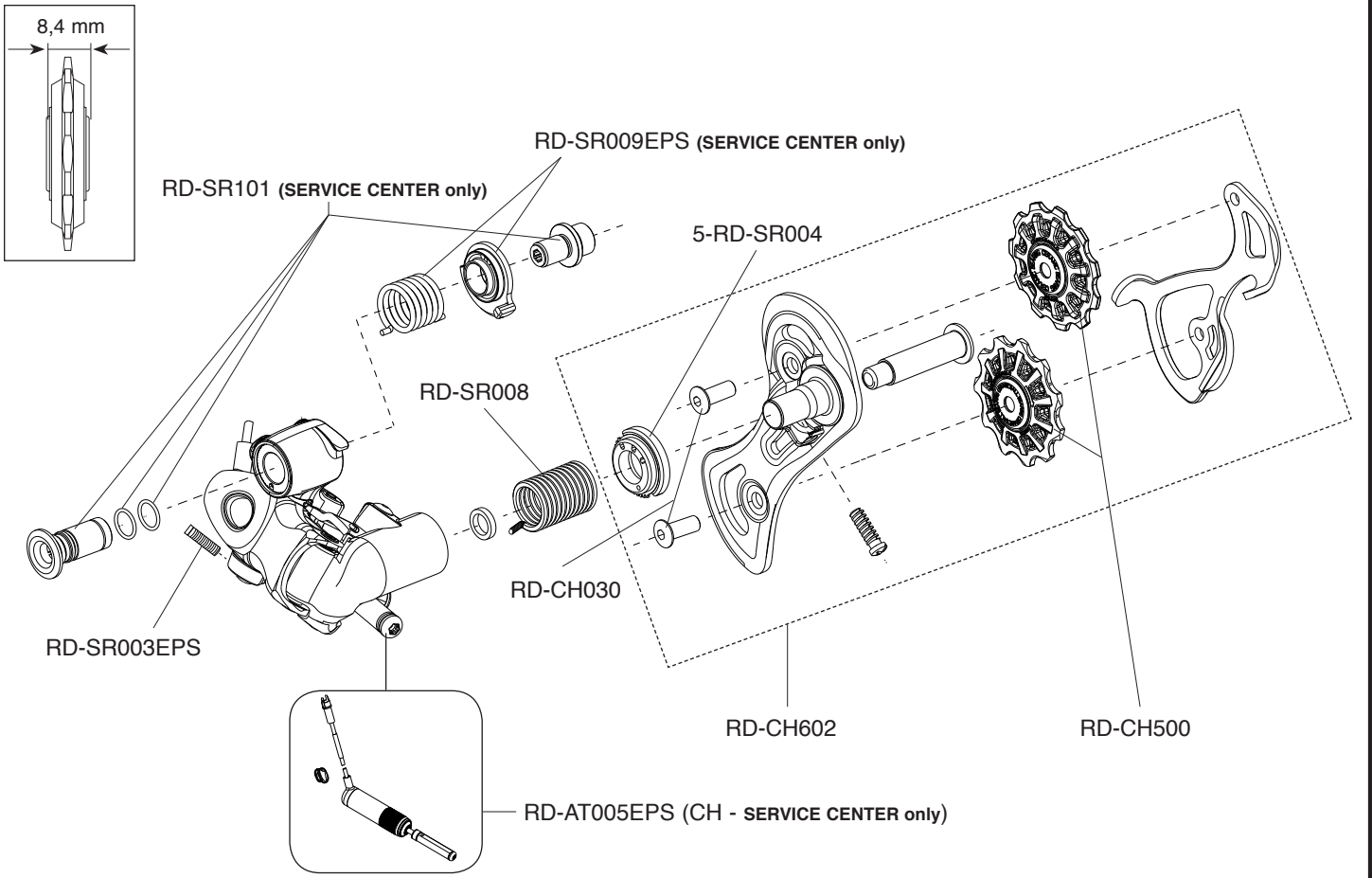
8,4 mm
RD-SR009EPS (SERVICE CENTER only)
RD-SR101 (SERVICE CENTER only)
5-RD-SR004
RD-SR008
RD-CH030
RD-SR003EPS
RD-CH602
RD-CH500
RD-AT005EPS (CH - SERVICE CENTER only)

SUPER RECORD 11S

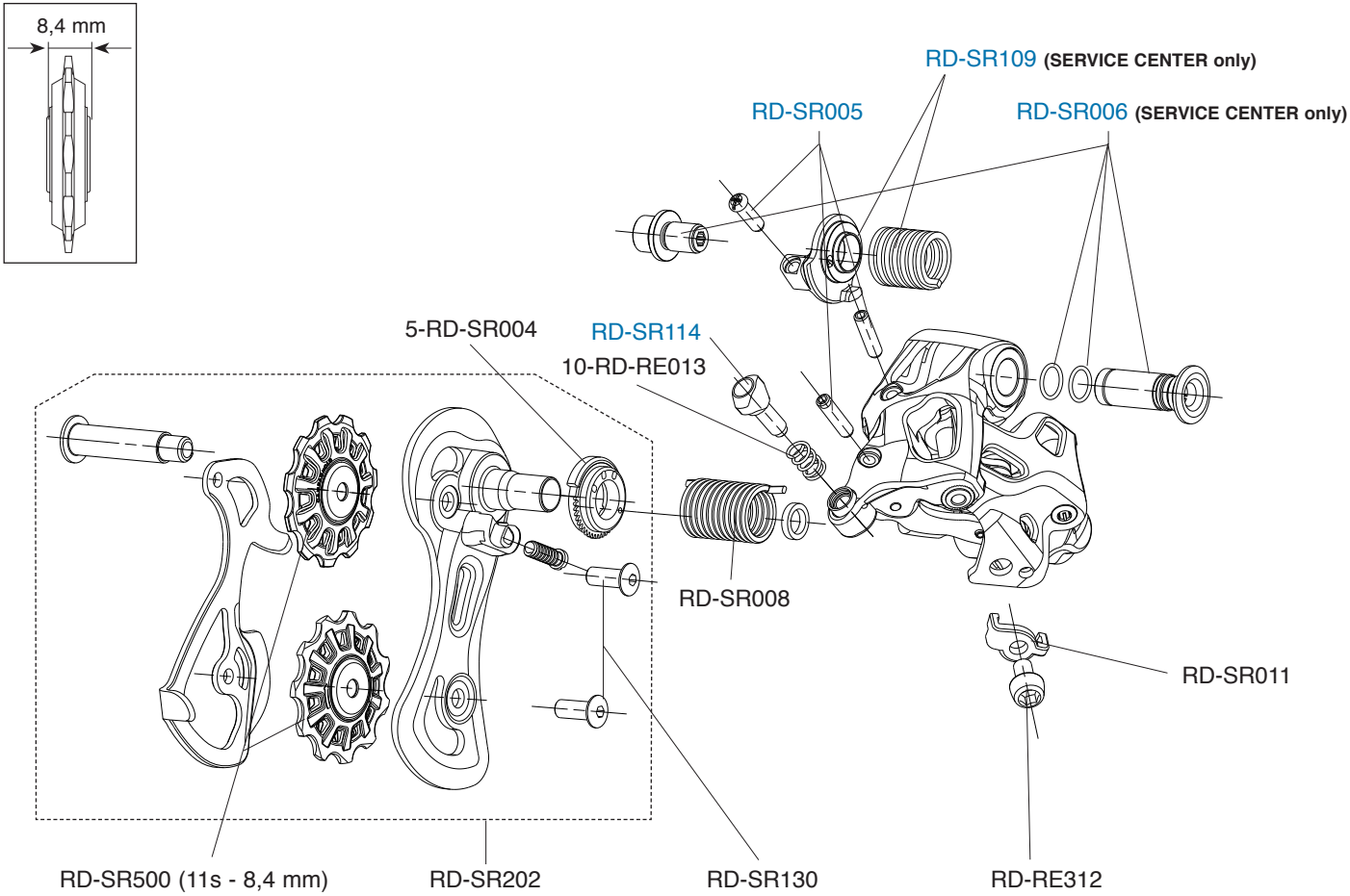

RECORD 11S

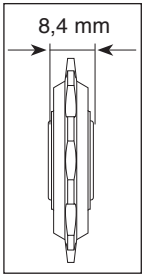

RD-SR109 **(SERVICE CENTER only)**

RD-SR005

RD-SR006 **(SERVICE CENTER only)**

5-RD-SR004

RD-SR014

10-RD-RE013

RD-SR008

RD-SR011

RD-SR500 (11s - 8,4 mm)

RD-SR202

RD-SR130

5-RD-RE112

CHORUS 11S

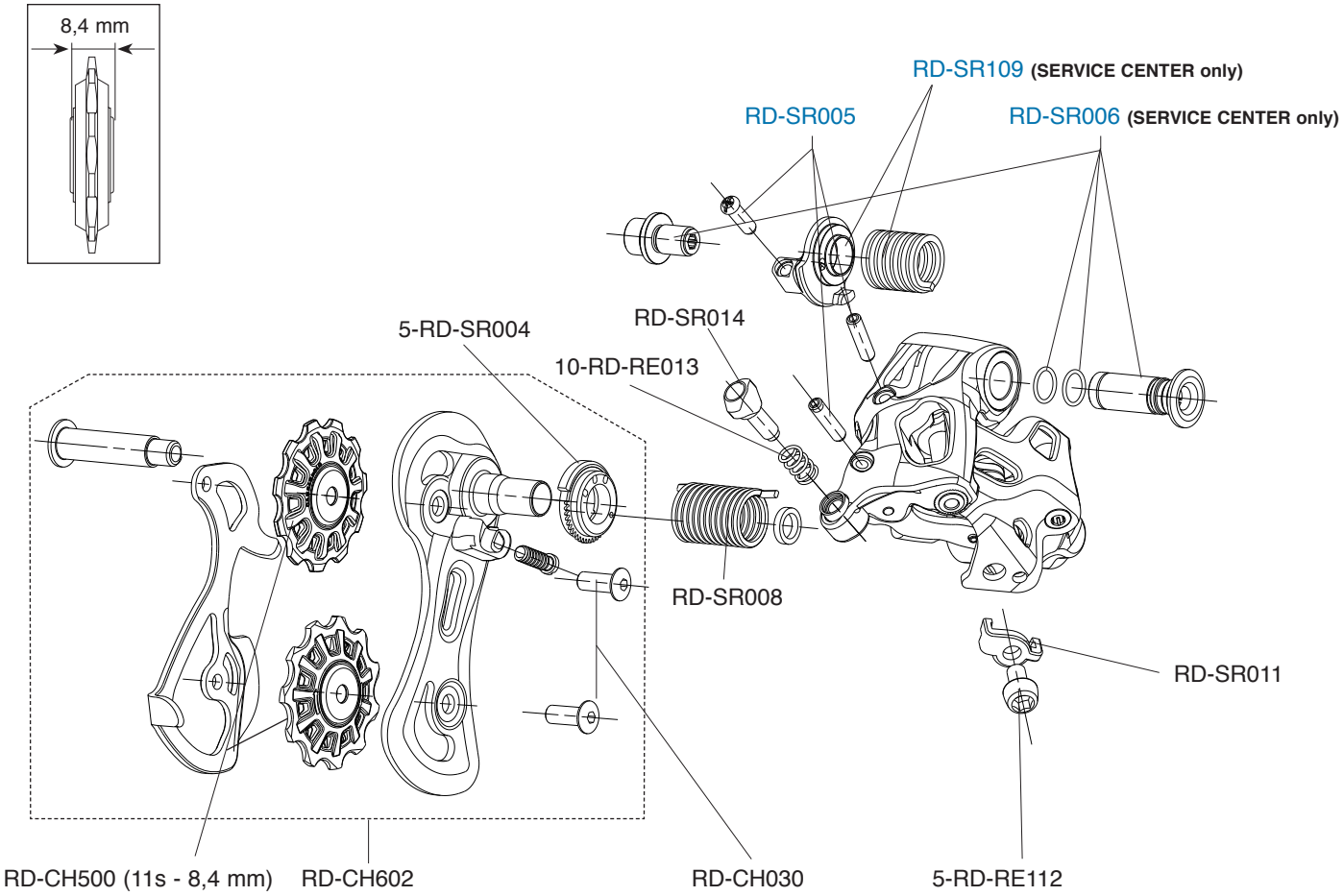
8,4 mm
RD-SR109 (SERVICE CENTER only)
RD-SR005
RD-SR006 (SERVICE CENTER only)
5-RD-SR004
RD-SR014
10-RD-RE013
RD-SR008
RD-SR011
RD-CH500 (11s - 8,4 mm)
RD-CH602
RD-CH030
5-RD-RE112

ATHENA 11S / ATHENA TRIPLE 11S

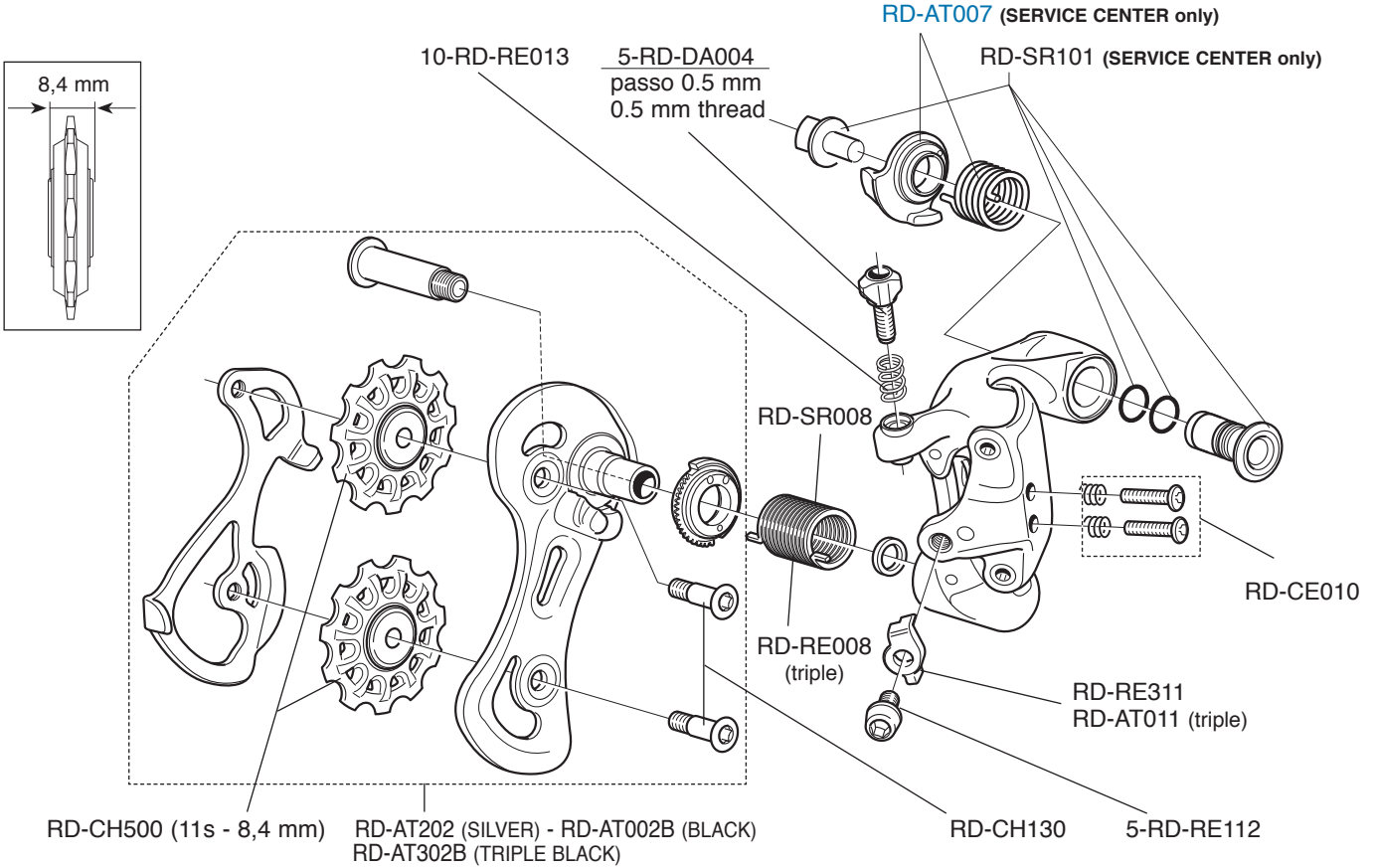

VELOCE 10S

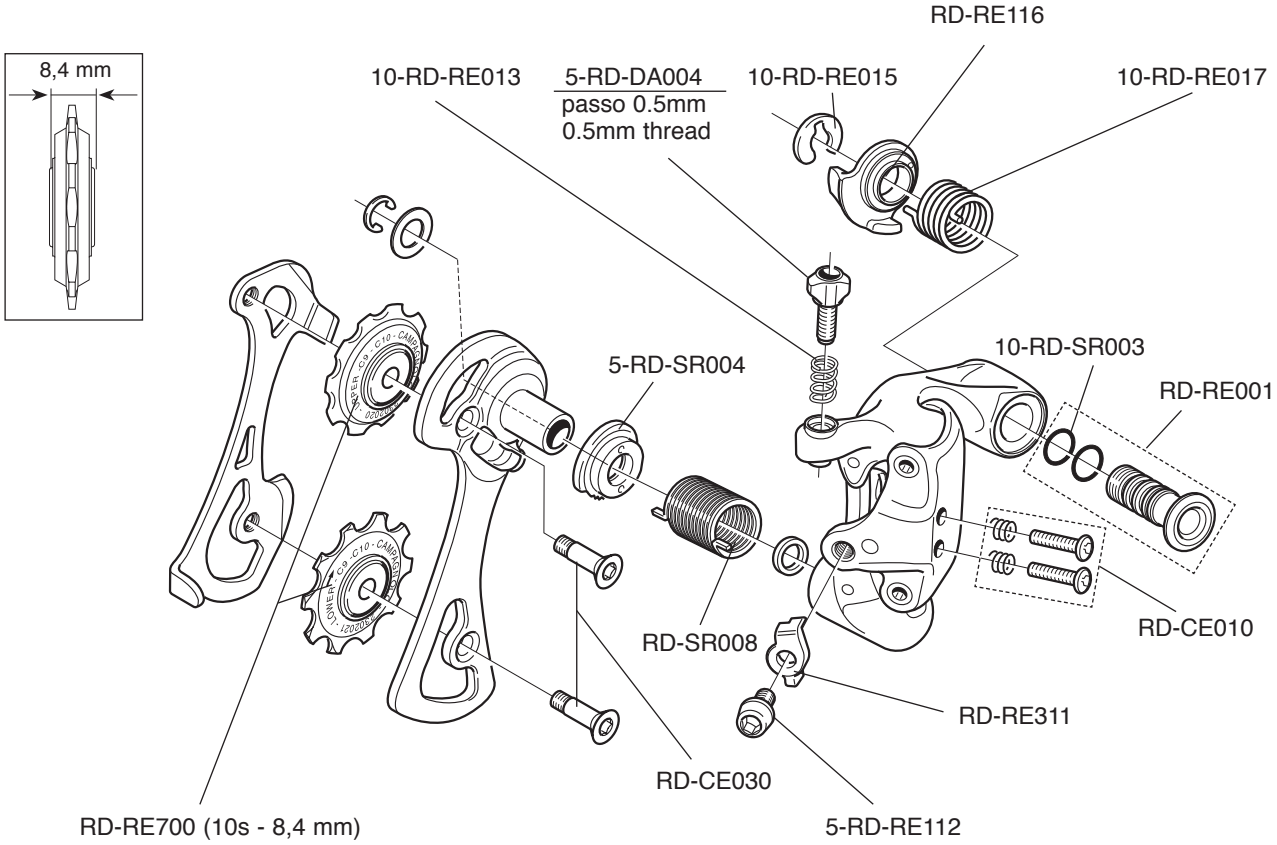
8,4 mm
RD-RE116
10-RD-RE013
5-RD-DA004
passo 0.5mm
0.5mm thread
10-RD-RE015
10-RD-RE017
10-RD-SR003
5-RD-SR004
RD-RE001
RD-CE010
RD-SR008
RD-RE311
RD-CE030
RD-RE700 (10s - 8,4 mm)
5-RD-RE112

SUPER RECORD 11S MY 2011-2014

Complete rear derailleur: RD-11SR1SP

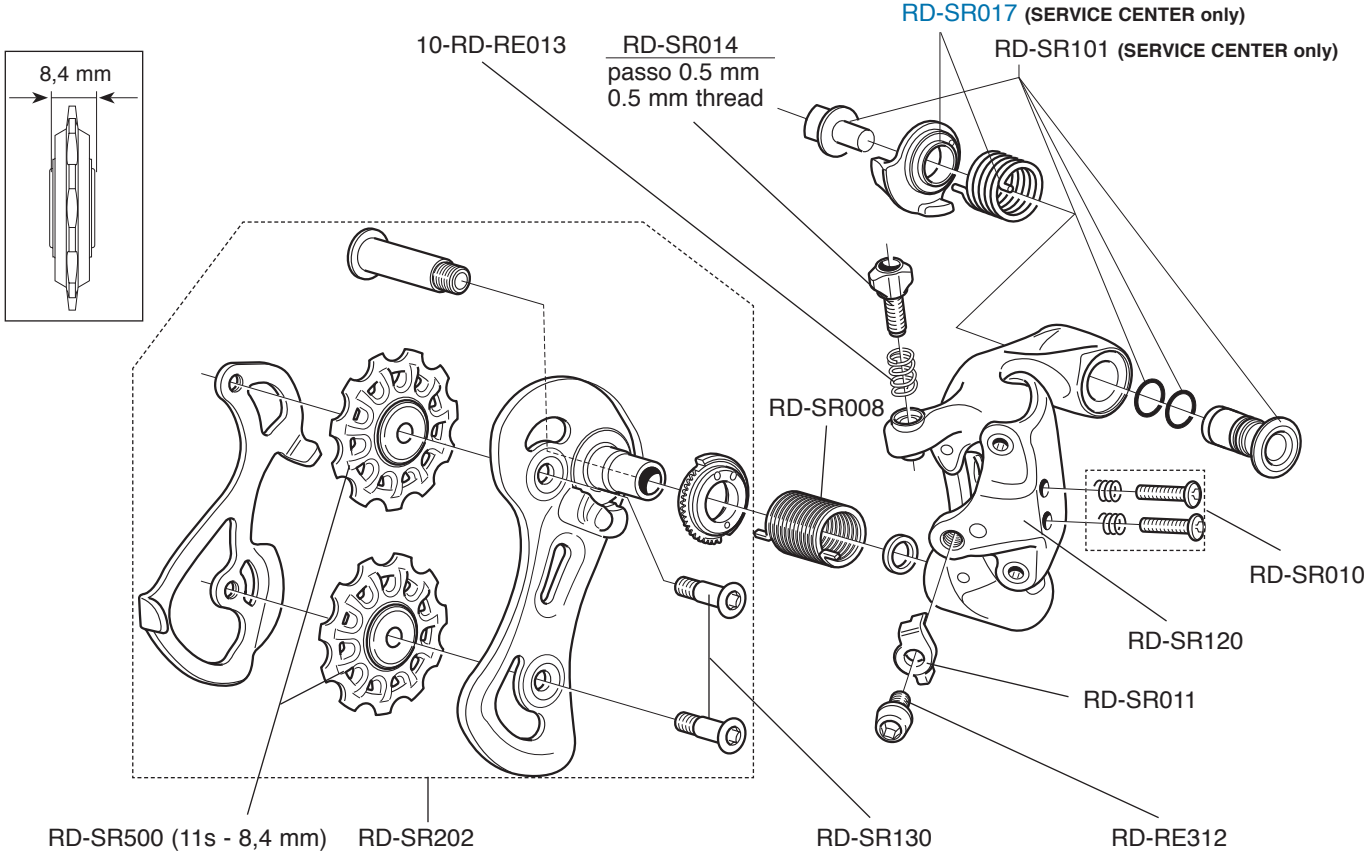

Complete rear derailleur: RD-11RE1SP

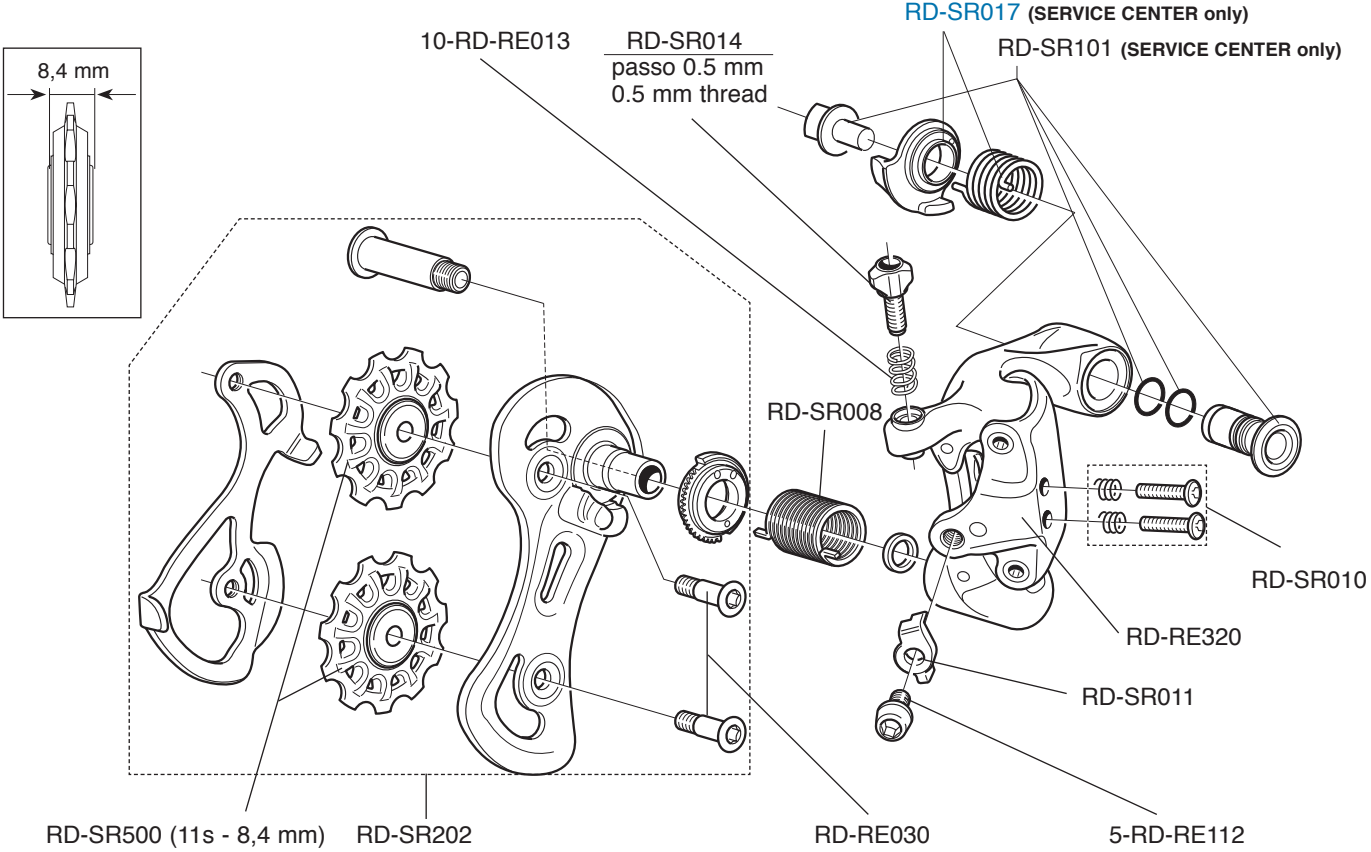

CHORUS 11S MY 2011-2014

Complete rear derailleur: RD-11CH1SP

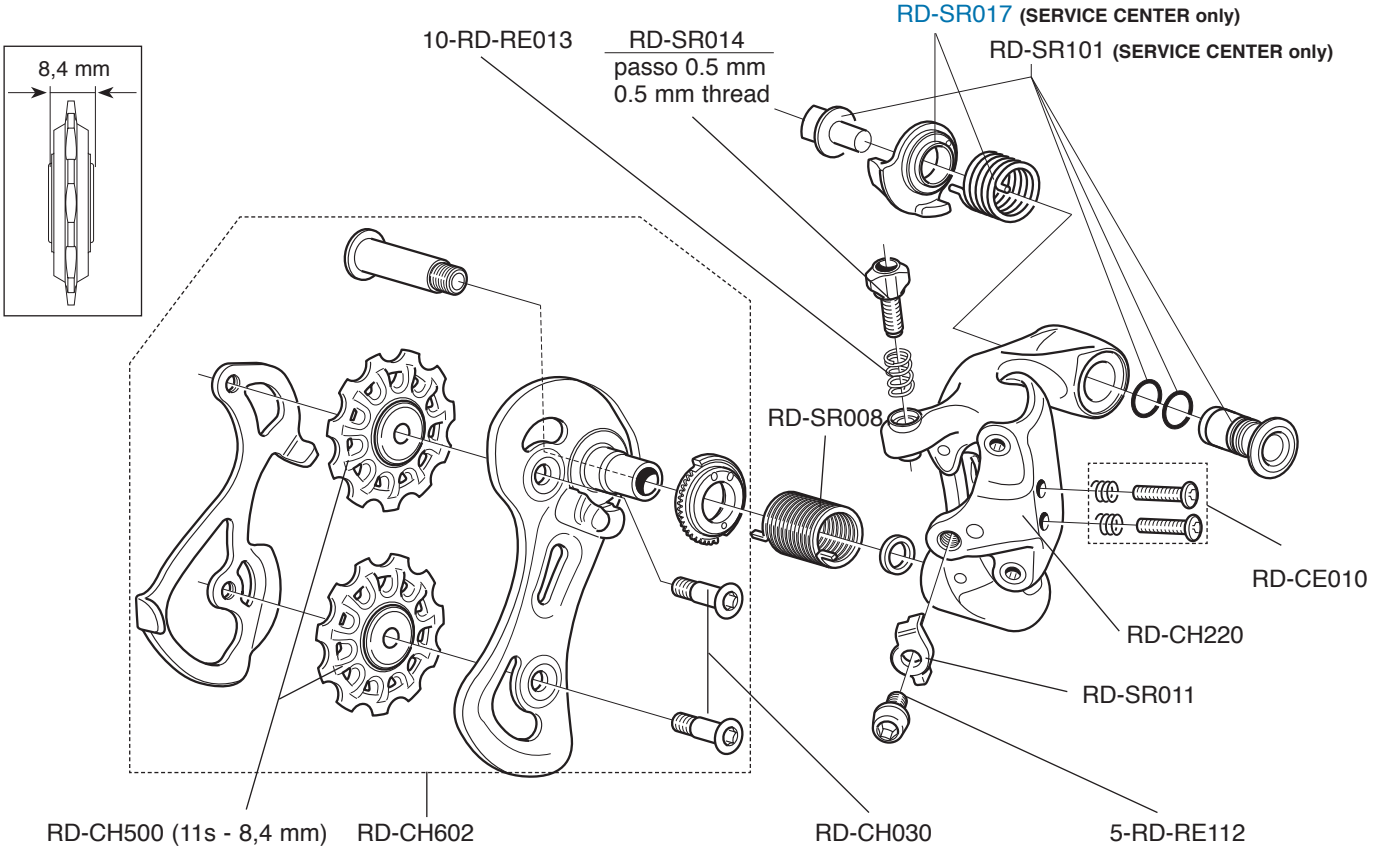

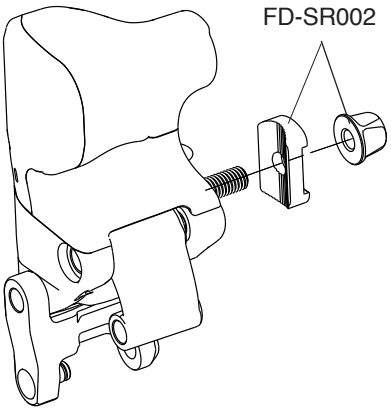

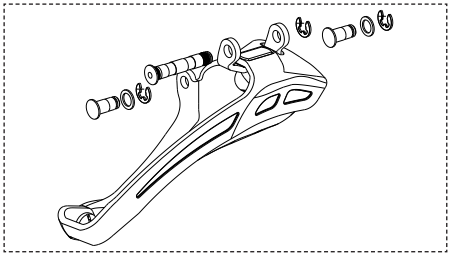

SERVICE CENTER only!
FD-SR115EPS (SR)

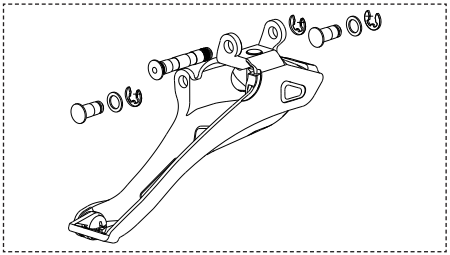

SERVICE CENTER only!
FD-RE115EPS (RE)

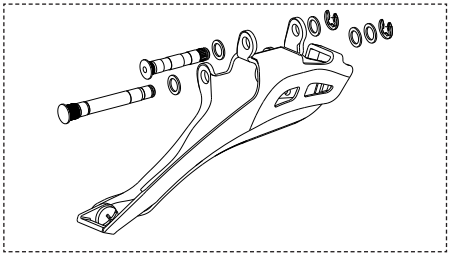

SERVICE CENTER only!
FD-AT015EPS (CH)

SUPER RECORD 11S

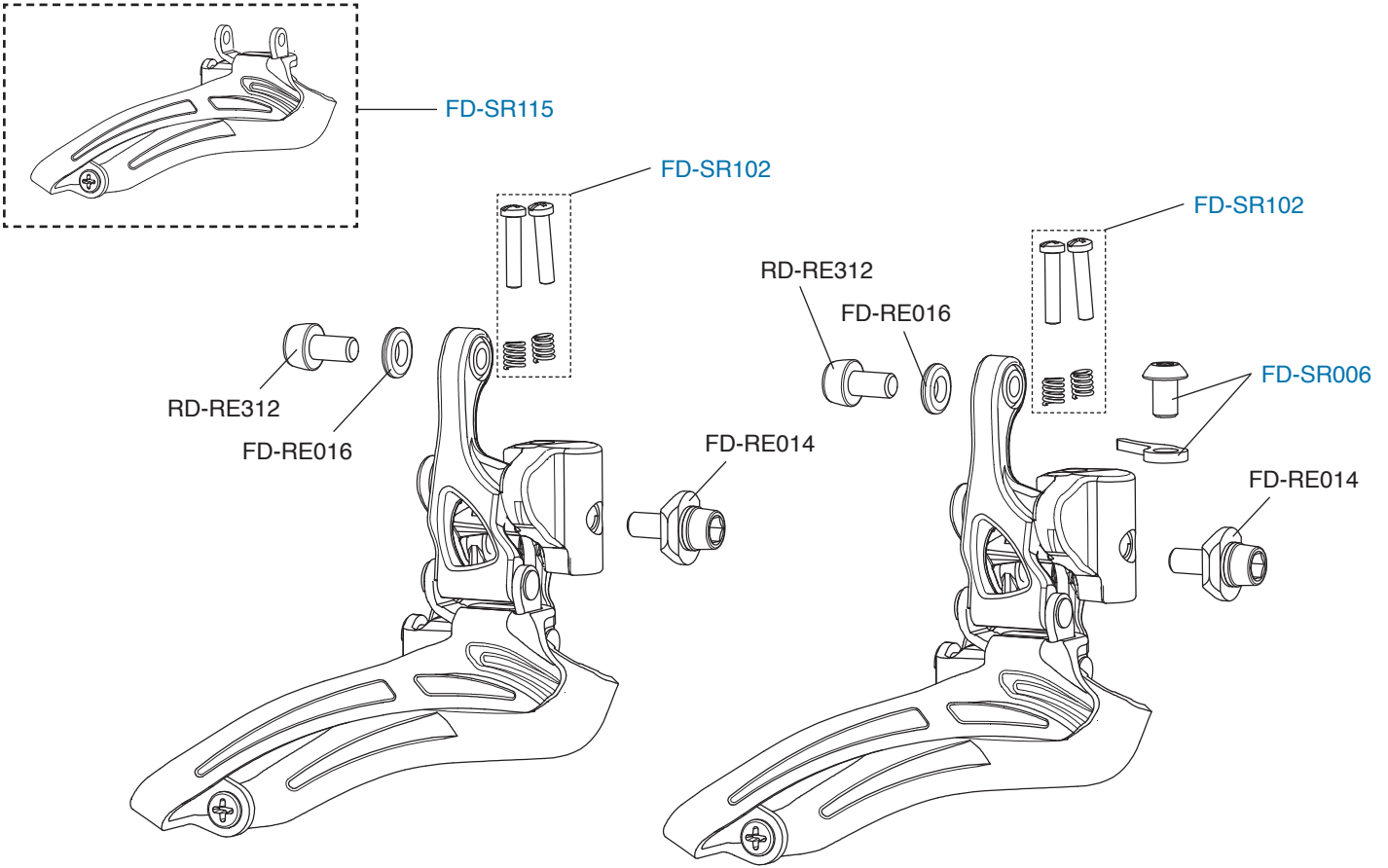

RECORD 11S

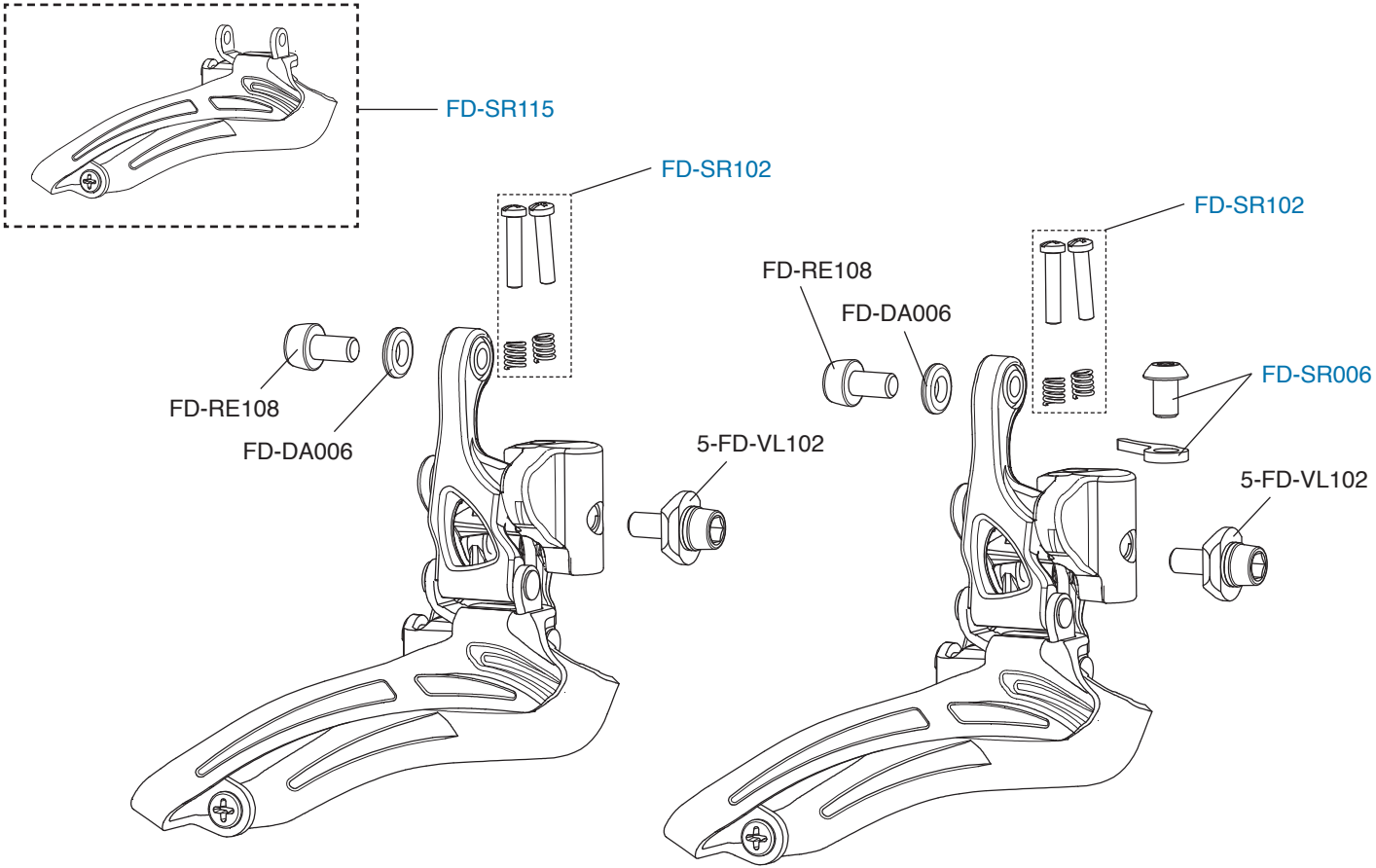
FD-SR115
FD-SR102
FD-RE108
FD-DA006
5-FD-VL102
FD-SR102
FD-RE108
FD-DA006
FD-SR006
5-FD-VL102

CHORUS 11S

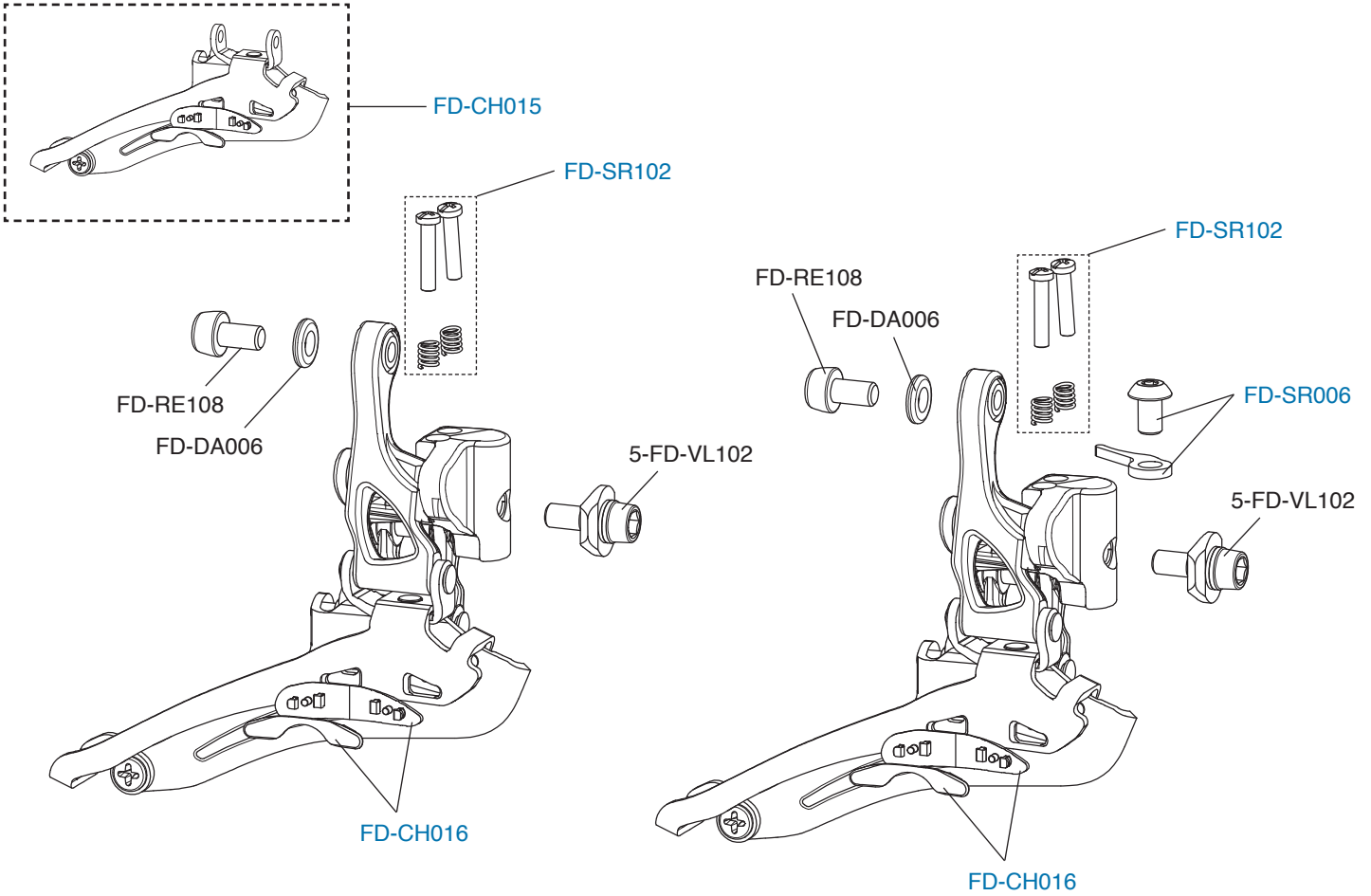
FD-CH015
FD-SR102
FD-RE108
FD-DA006
5-FD-VL102
FD-CH016
FD-SR102
FD-RE108
FD-DA006
FD-SR006
5-FD-VL102
FD-CH016

ATHENA 11S / ATHENA TRIPLE 11S

SILVER	
ø 32 mm	**FD-CE021**
ø 35 mm	**FD-CE022**

BLACK	
ø 32 mm	**FD-SR021**
ø 35 mm	**FD-SR022**

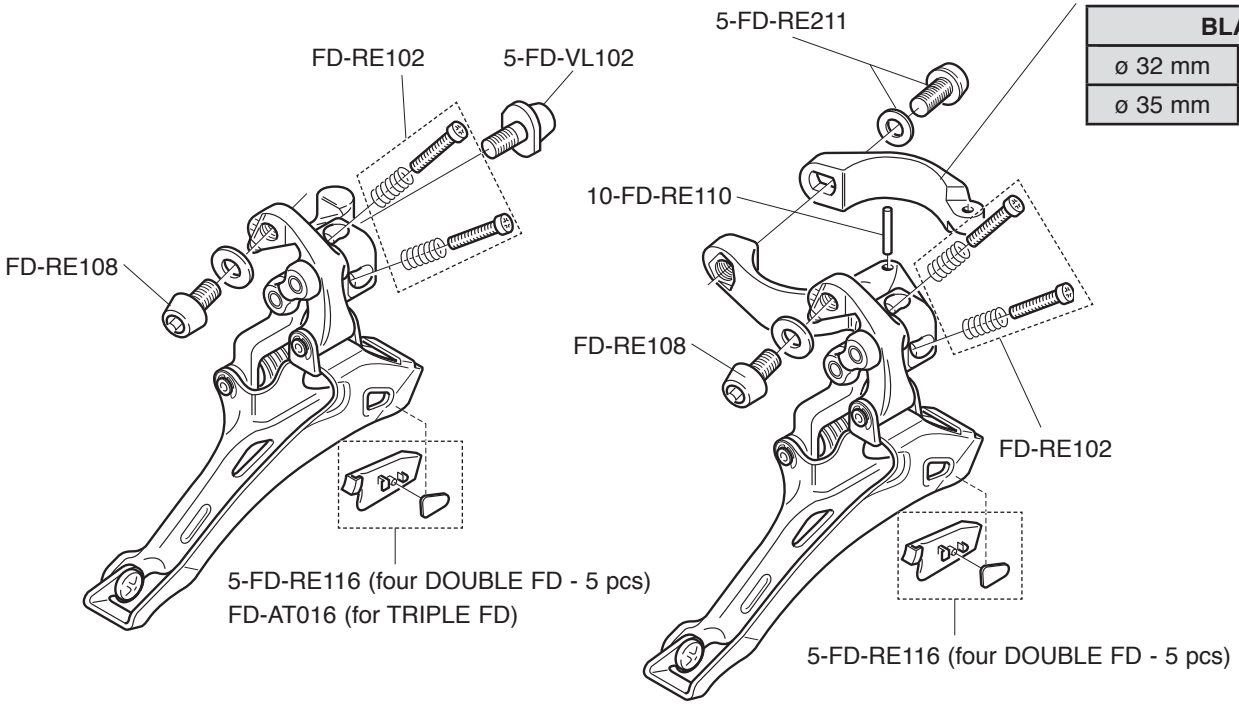

VELOCE 10S

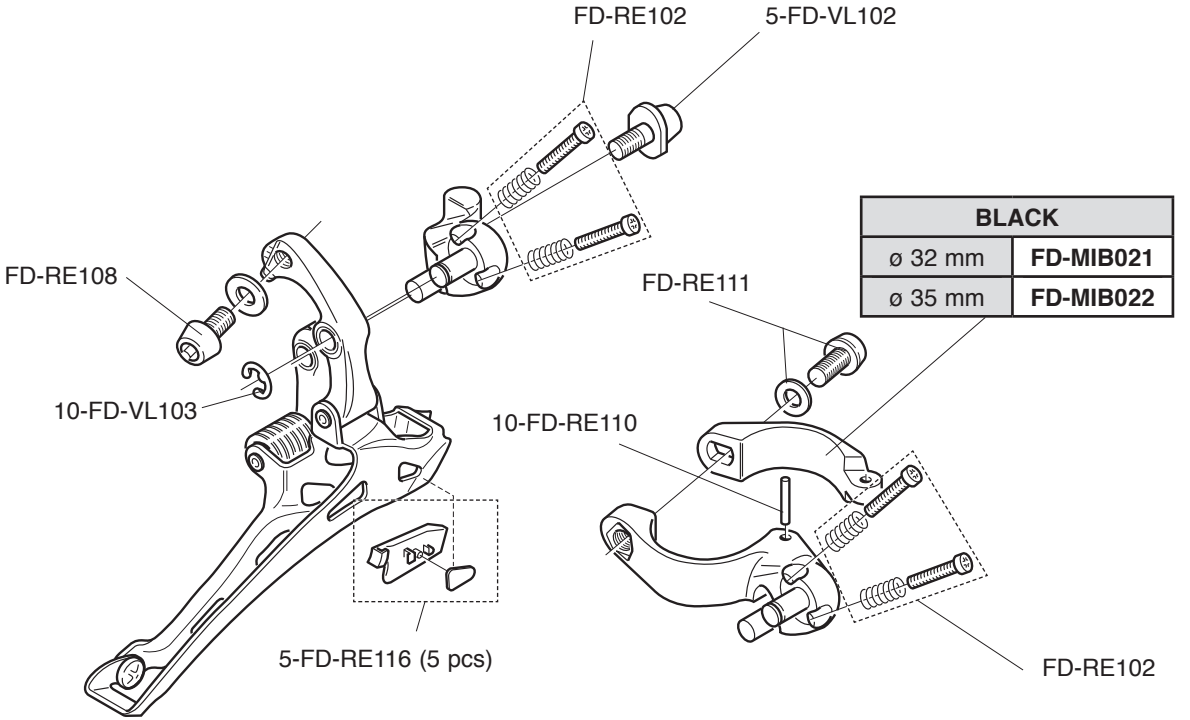

BLACK	
ø 32 mm	**FD-MIB021**
ø 35 mm	**FD-MIB022**

SUPER RECORD 11S MY 2011-2014

Complete front derailleur: FD-11SR2BSP

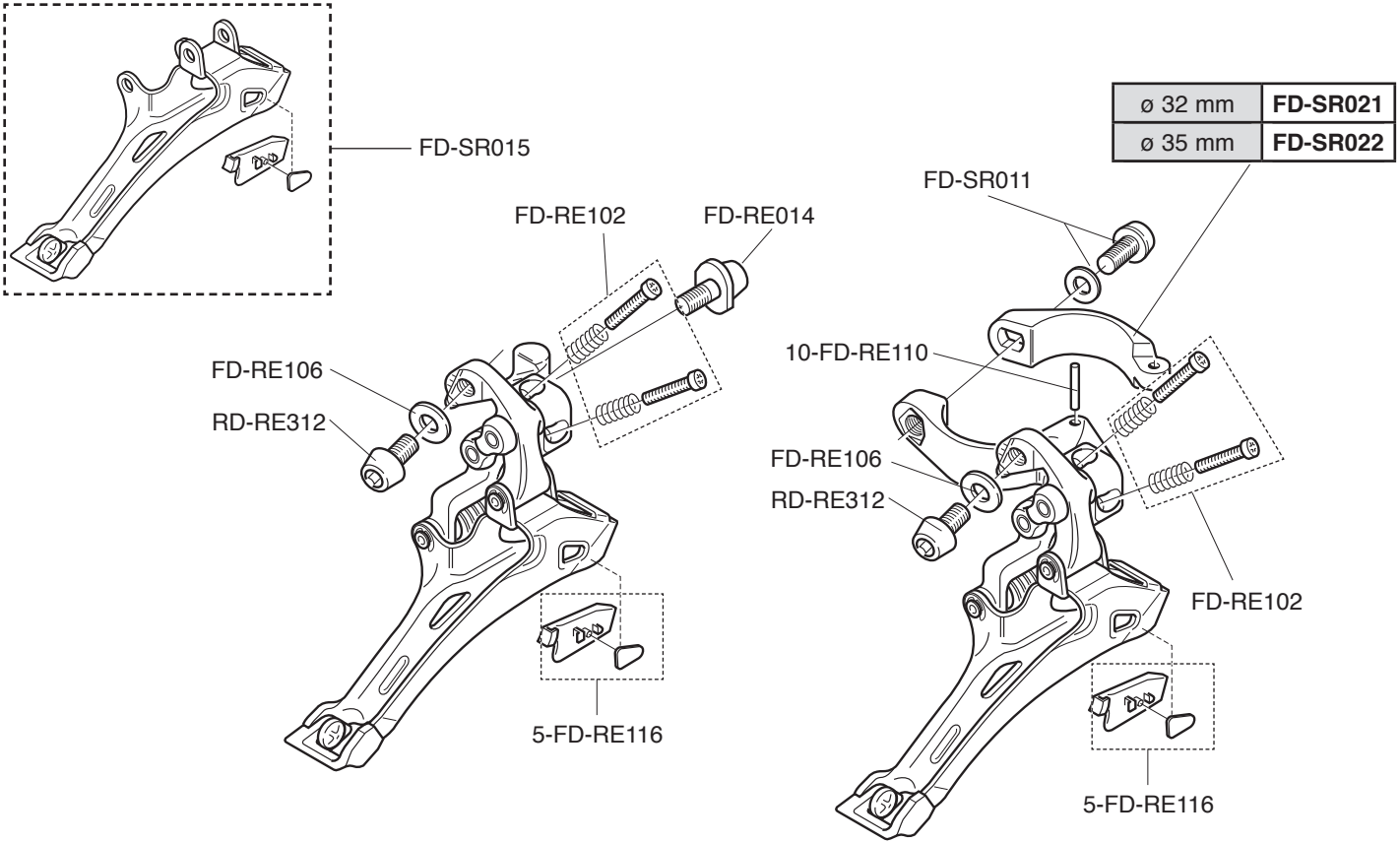

ø 32 mm	**FD-SR021**
ø 35 mm	**FD-SR022**

RECORD 11S MY 2011-2014

Complete front derailleur: FD-11RE2BSP

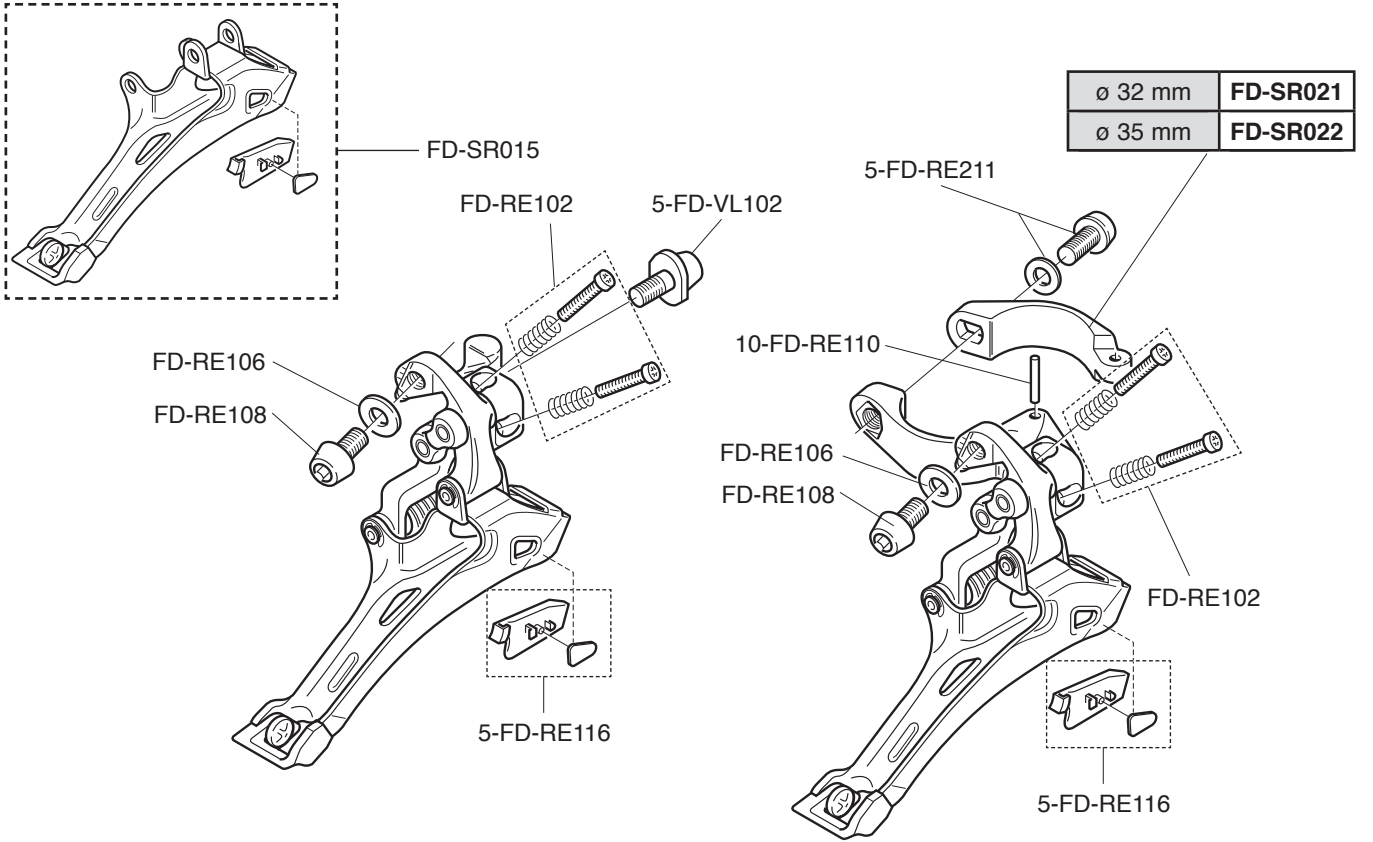

ø 32 mm	**FD-SR021**
ø 35 mm	**FD-SR022**

Complete front derailleur: FD-11CH2BSP

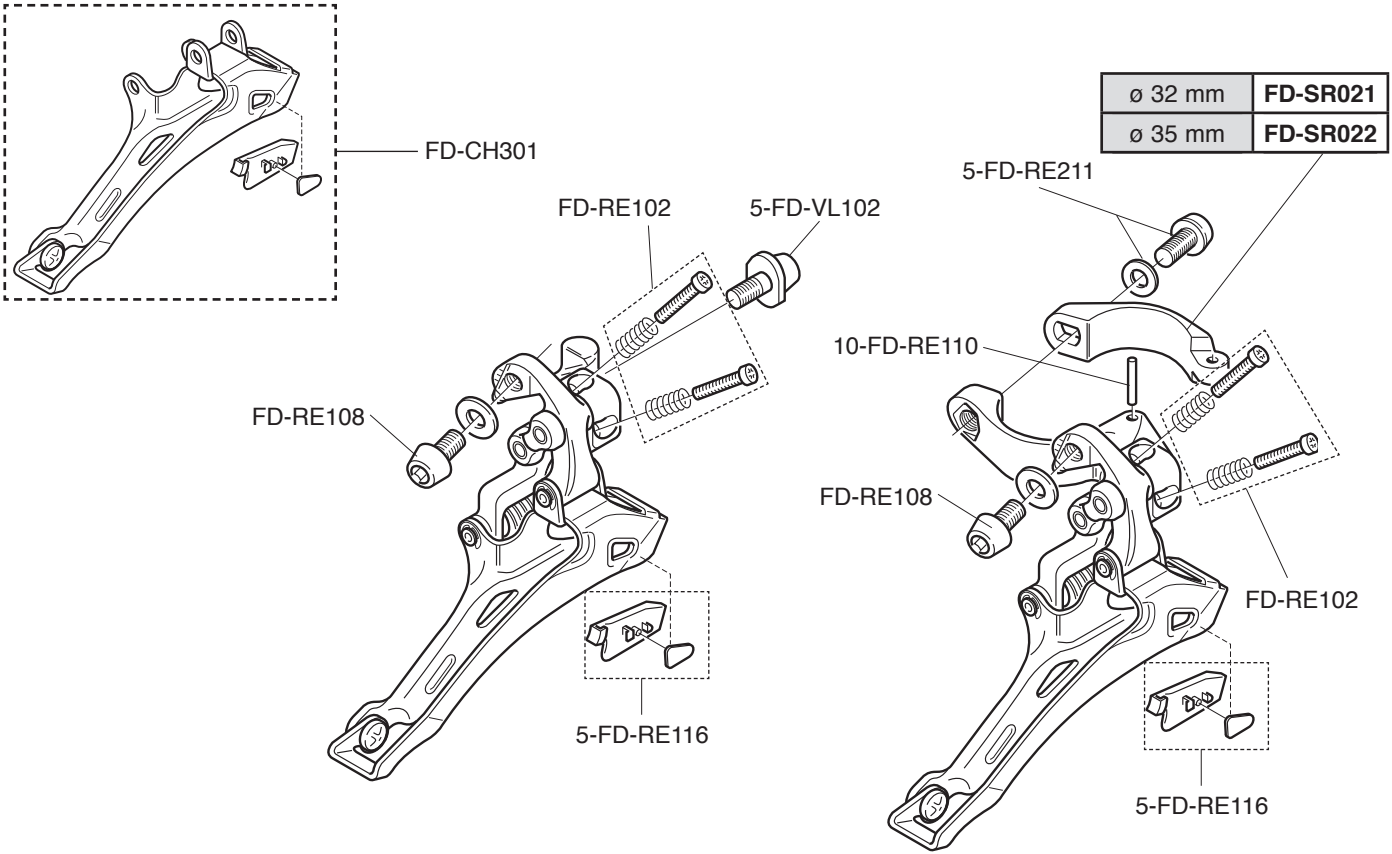

ø 32 mm	**FD-SR021**
ø 35 mm	**FD-SR022**

SUPER RECORD EPS 11S

CARBON

R.H. COMPLETE CONTROL LEVER / COMANDO DX COMPLETO
EP12-SR1EPSR
L.H. COMPLETE CONTROL LEVER / COMANDO SX COMPLETO
EP12-SR1EPSL

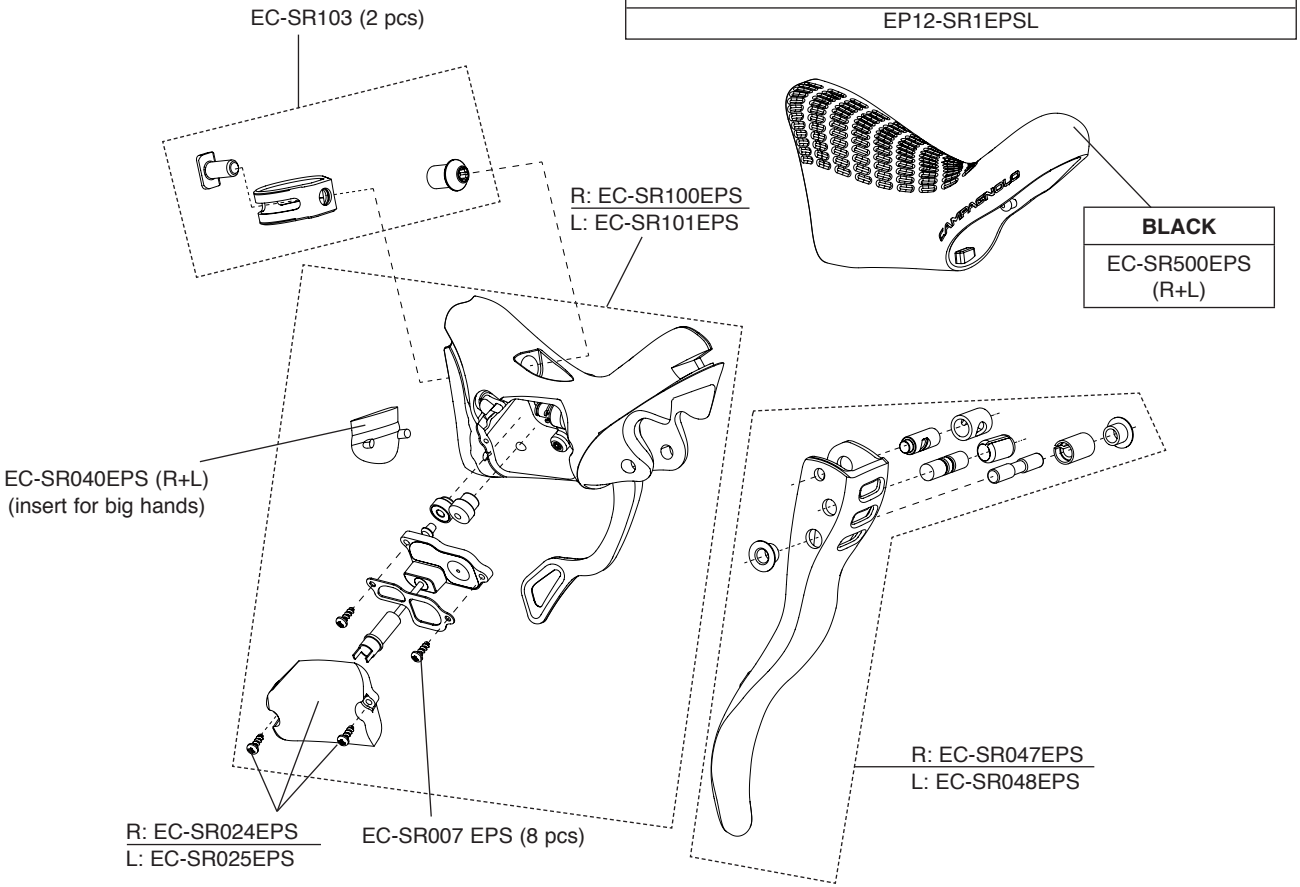

RECORD EPS 11S

CARBON

R.H. COMPLETE CONTROL LEVER / COMANDO DX COMPLETO
EP12-RE1EPSR
L.H. COMPLETE CONTROL LEVER / COMANDO SX COMPLETO
EP12-RE1EPSL

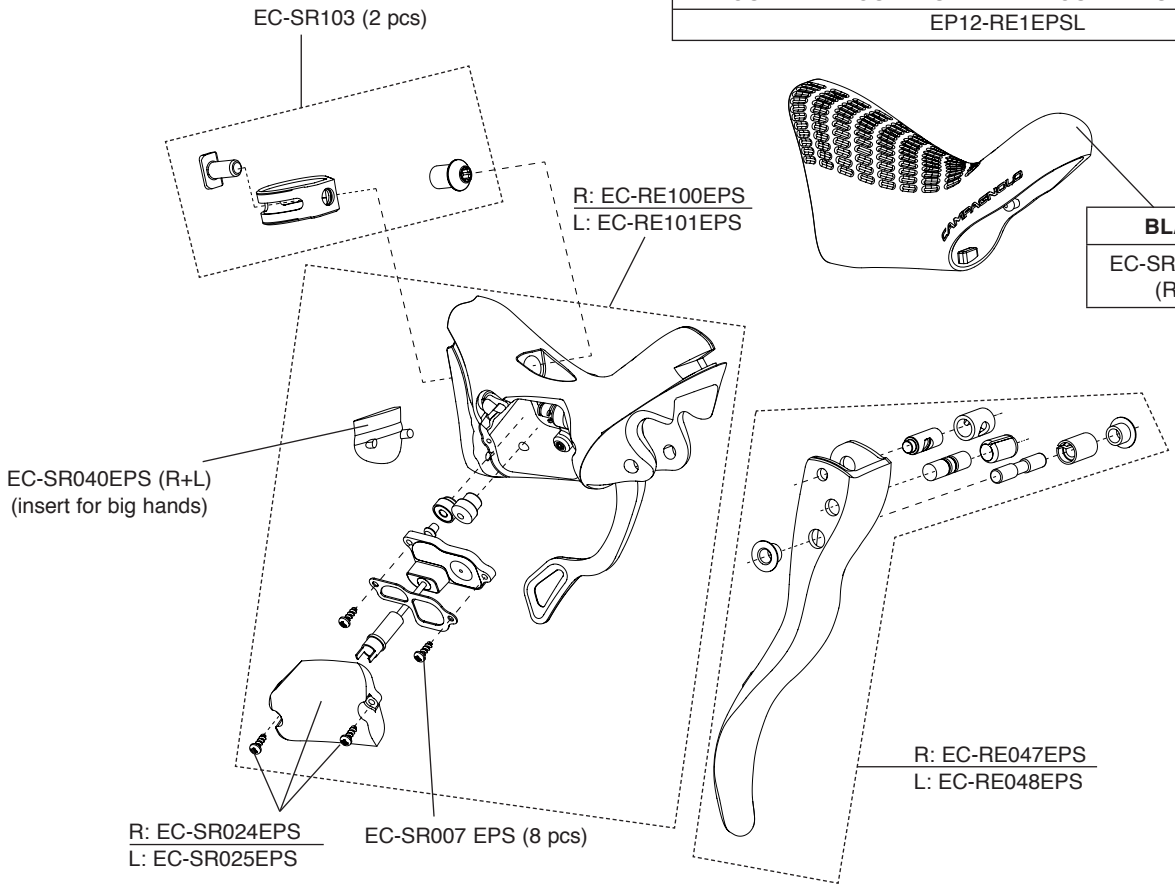

CHORUS EPS 11S

CARBON

R.H. COMPLETE CONTROL LEVER / COMANDO DX COMPLETO
EP15-CH1EPSR
L.H. COMPLETE CONTROL LEVER / COMANDO SX COMPLETO
EP15-CH1EPSL

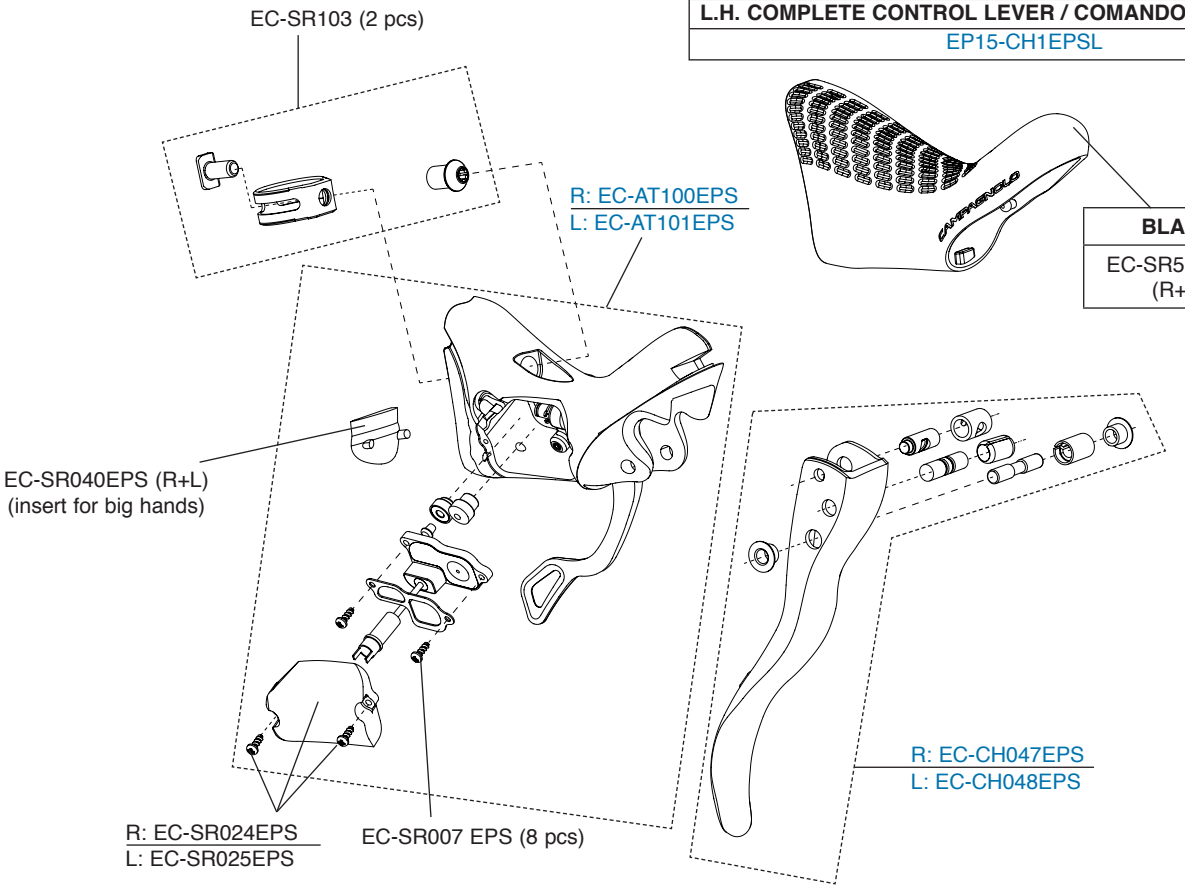

SUPER RECORD 11S

CARBON - ULTRA-SHIFT

BLACK	WHITE	RED
EC-SR600 (R+L)	EC-SR600W (R+L)	EC-SR600R (R+L)

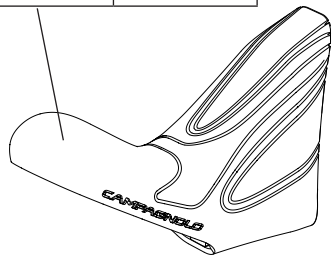

EC-SR103 (2 pcs)

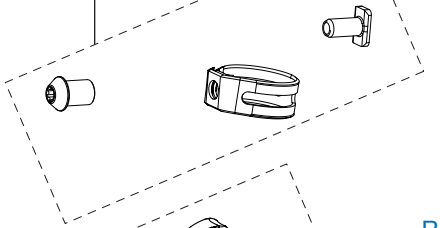

R: EC-SR200
L: EC-SR201

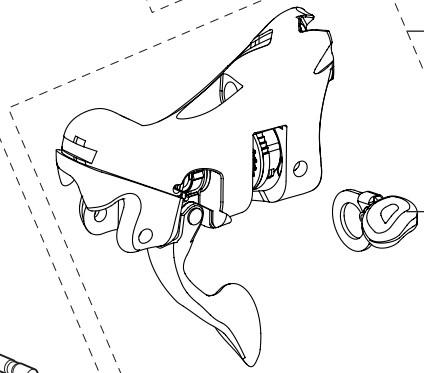

R: EC-SR004
L: EC-SR005

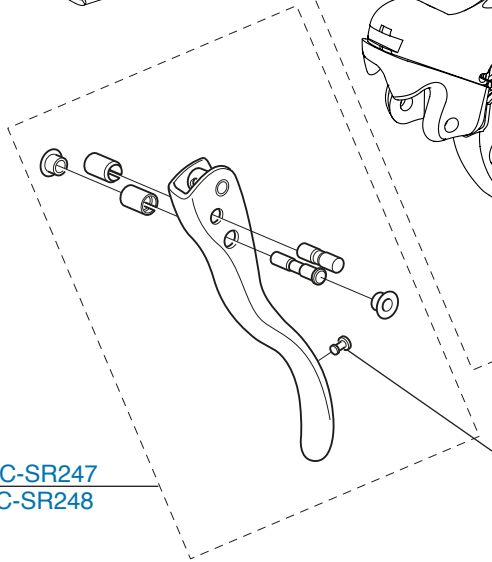

R: EC-SR247
L: EC-SR248

EC-SR050
(R+L - 5 pairs)

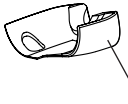

(insert for big hands)
EC-SR040 (R+L)

BLACK	WHITE	RED
EC-SR600 (R+L)	EC-SR600W (R+L)	EC-SR600R (R+L)

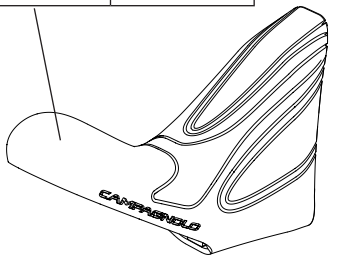

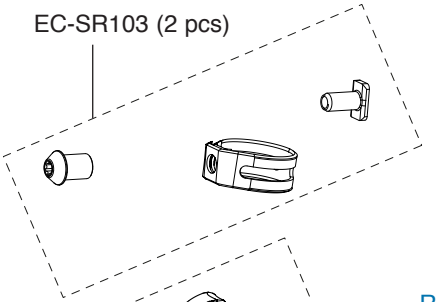

EC-SR103 (2 pcs)

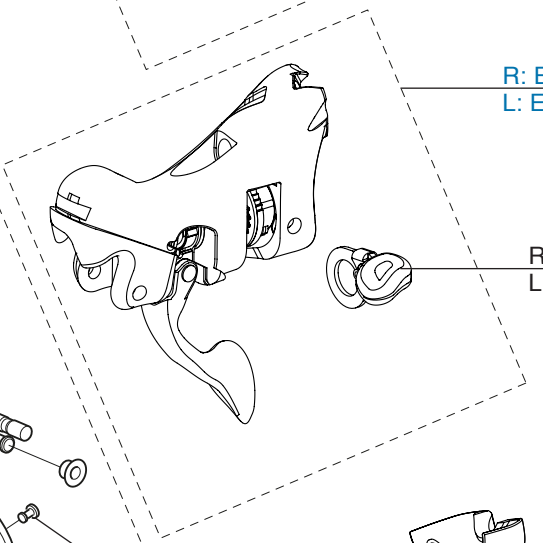

R: EC-RE300
L: EC-RE301

R: EC-SR004
L: EC-SR005

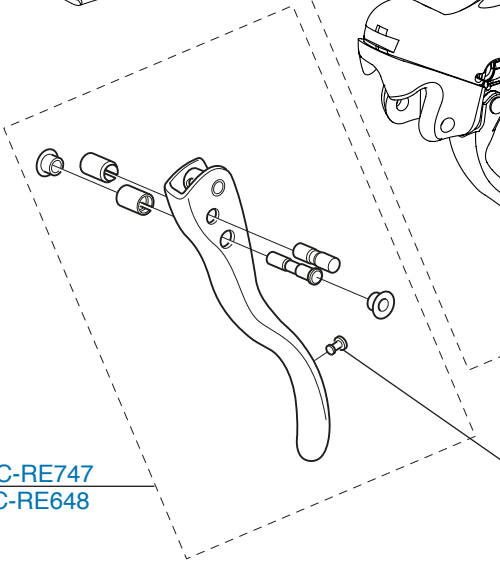

R: EC-RE747
L: EC-RE648

EC-SR050
(R+L - 5 pairs)

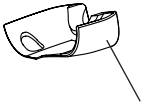

(insert for big hands)
EC-SR040 (R+L)

CHORUS 11S

BLACK	WHITE	RED
EC-SR600 (R+L)	EC-SR600W (R+L)	EC-SR600R (R+L)

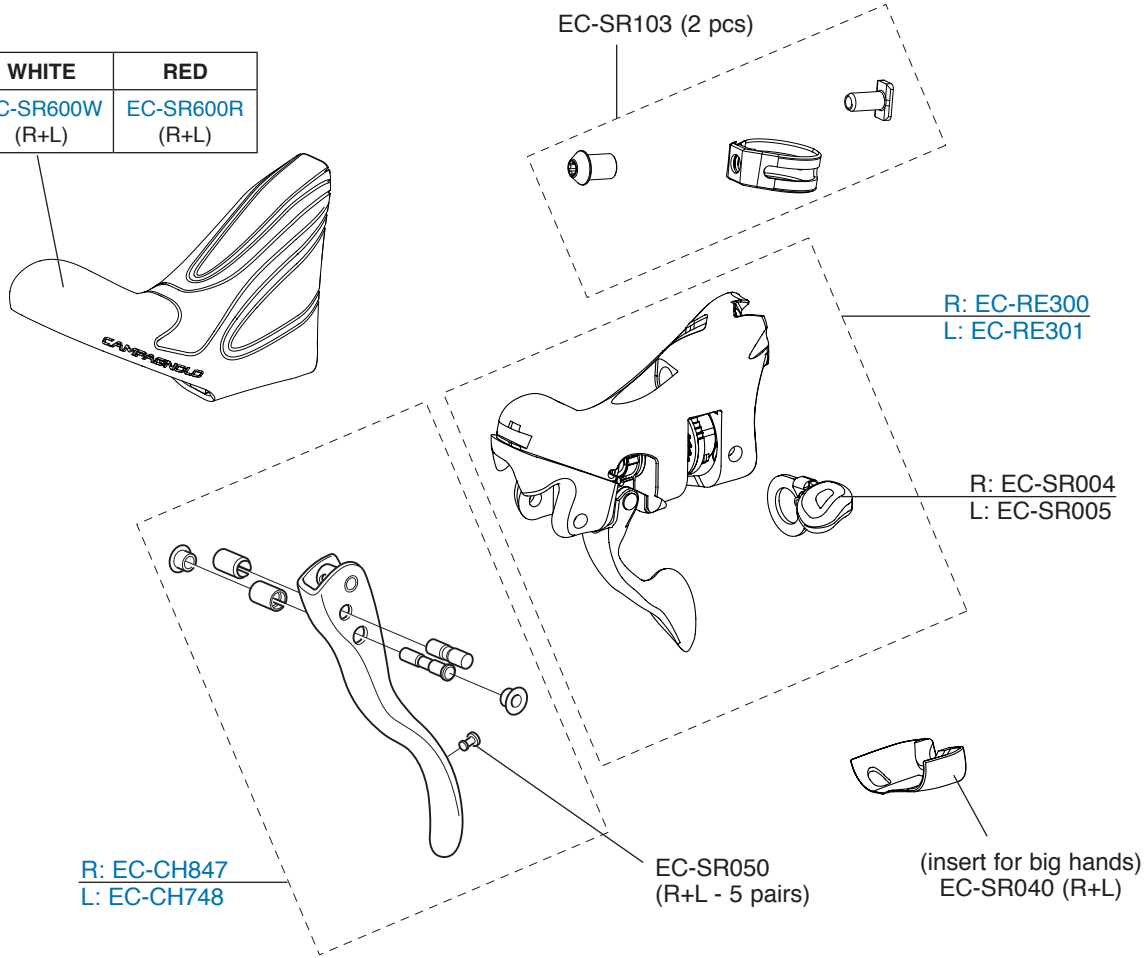

BLACK	WHITE	RED
EC-AT500B (R+L)	EC-AT500W (R+L)	EC-AT500R (R+L)

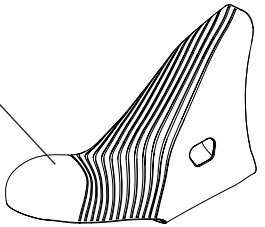

EC-SR103 (2 pcs)

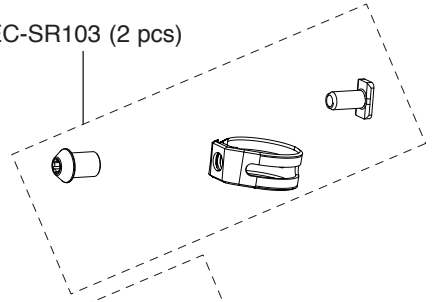

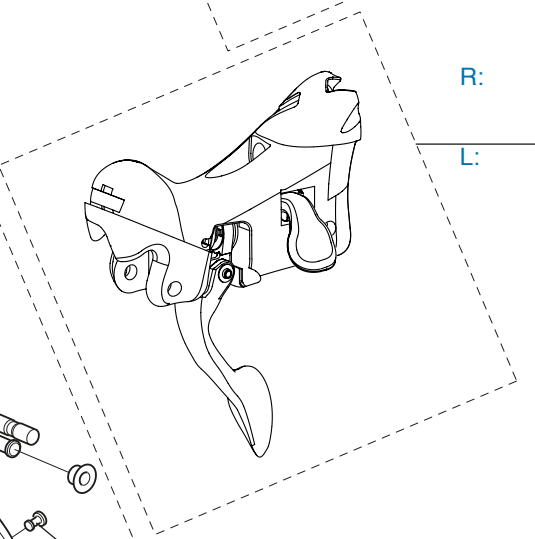

R: EC-AT400C (carbon)
EC-AT400S (silver)
EC-AT400B (black)

L: EC-AT401C (carbon)
EC-AT401S (silver)
EC-AT401B (black)

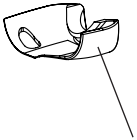

(insert for big hands)
EC-SR040 (R+L)

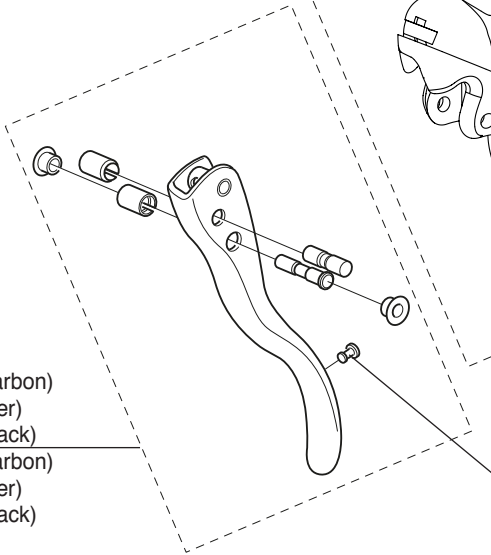

R: EC-AT747C (carbon)
EC-AT647 (silver)
EC-AT647B (black)

L: EC-AT848C (carbon)
EC-AT648 (silver)
EC-AT648B (black)

EC-SR050
(R+L - 5 pairs)

BLACK	WHITE	RED
EC-AT500B (R+L)	EC-AT500W (R+L)	EC-AT500R (R+L)

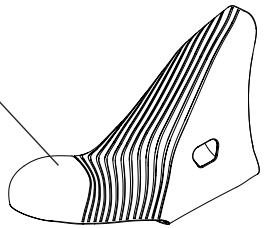

EC-SR103 (2 pcs)

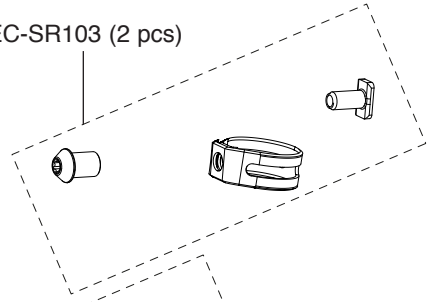

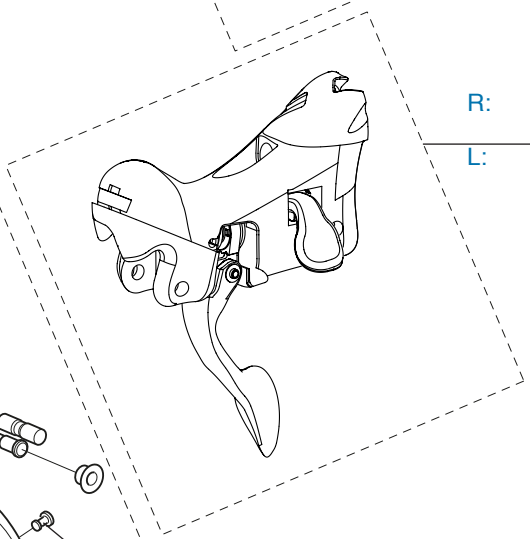

R: EC-AT400C (carbon)
EC-AT400B (black)

L: EC-AT403C (carbon)
EC-AT403B (black)

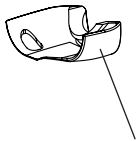

(insert for big hands)
EC-SR040 (R+L)

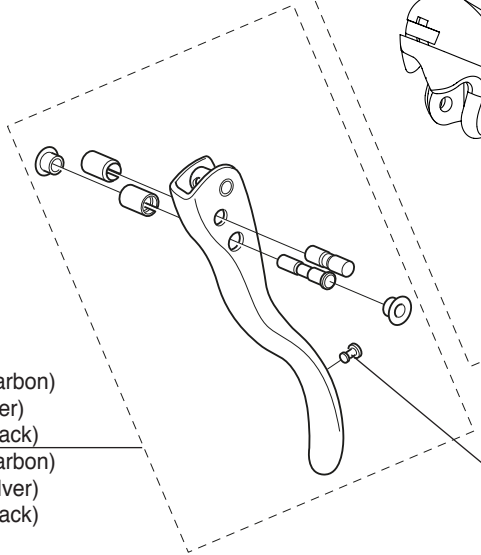

R: EC-AT747C (carbon)
EC-AT647 (silver)
EC-AT647B (black)

L: EC-AT948C (carbon)
EC-AT748S (silver)
EC-AT748B (black)

EC-SR050
(R+L - 5 pairs)

VELOCE 10S

BLACK	WHITE	RED
EC-AT500B (R+L)	EC-AT500W (R+L)	EC-AT500R (R+L)

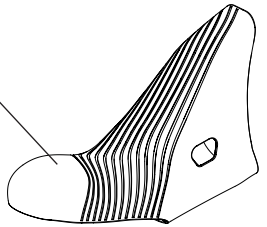

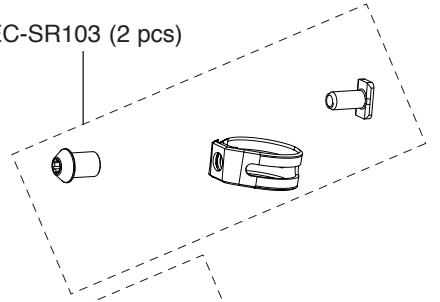

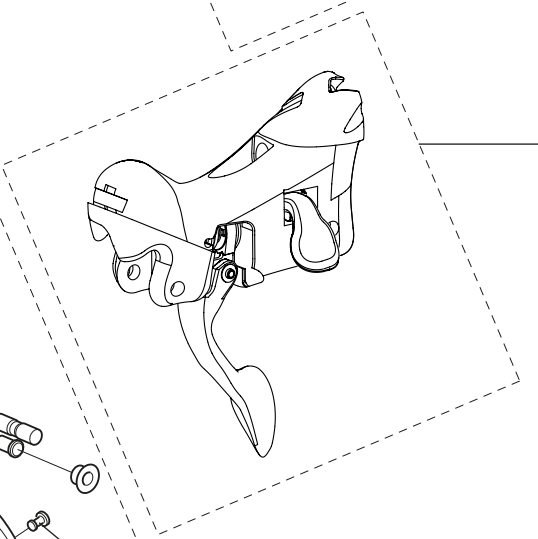

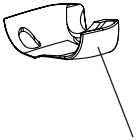

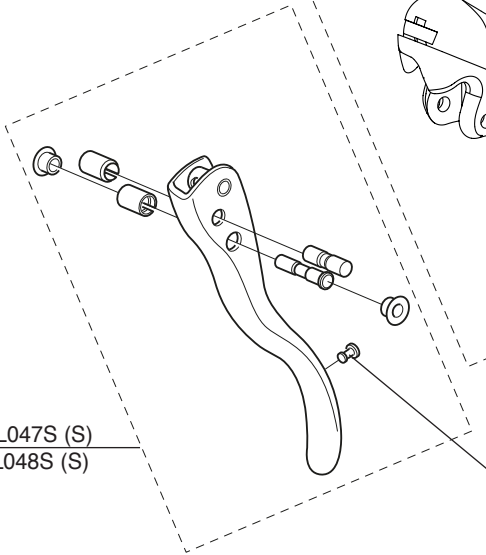

ALL VERSIONS

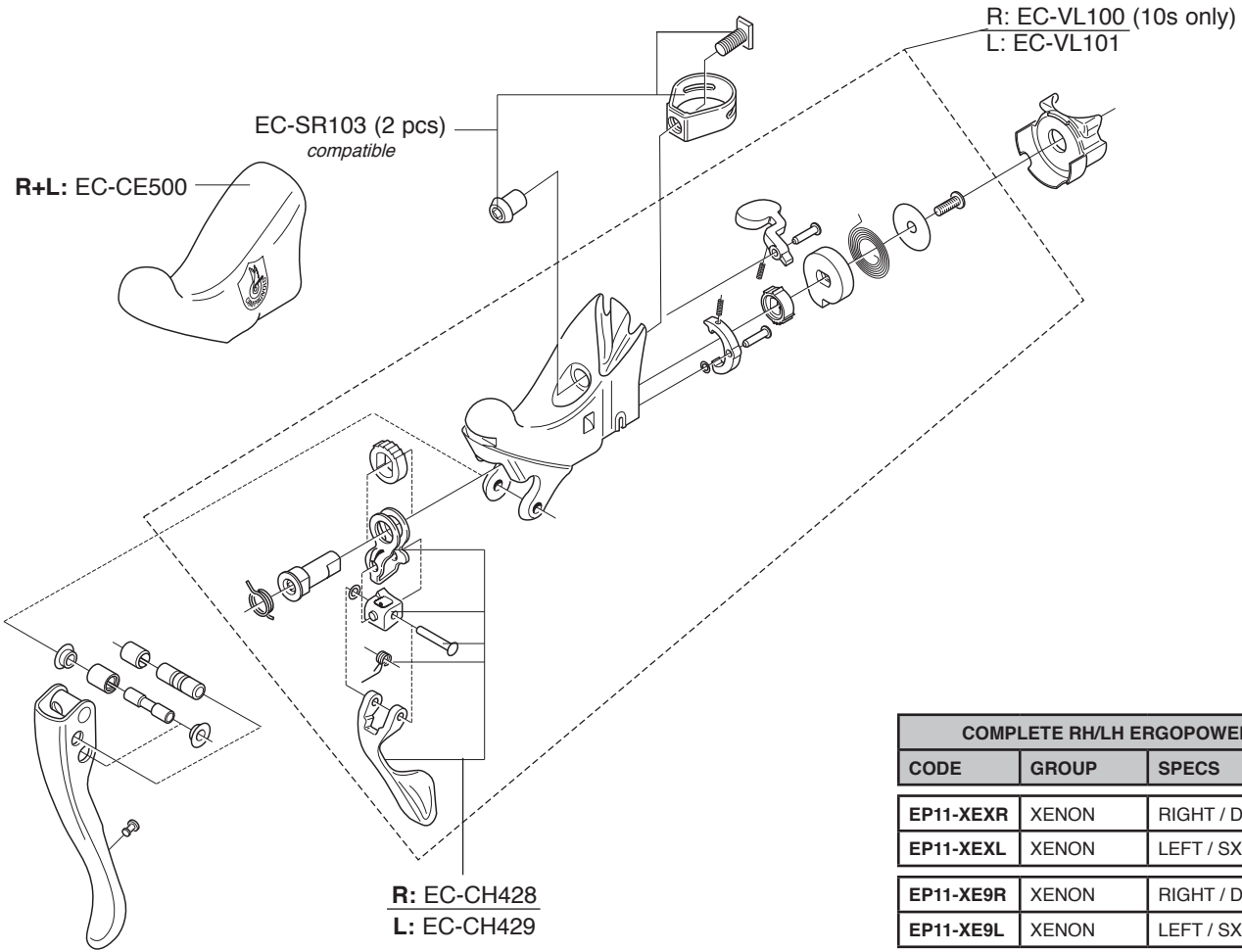

COMPLETE RH/LH ERGOPOWER		
CODE	**GROUP**	**SPECS**
EP11-XEXR	XENON	RIGHT / DX 10S
EP11-XEXL	XENON	LEFT / SX
EP11-XE9R	XENON	RIGHT / DX 9S
EP11-XE9L	XENON	LEFT / SX

RECORD 10S

QS

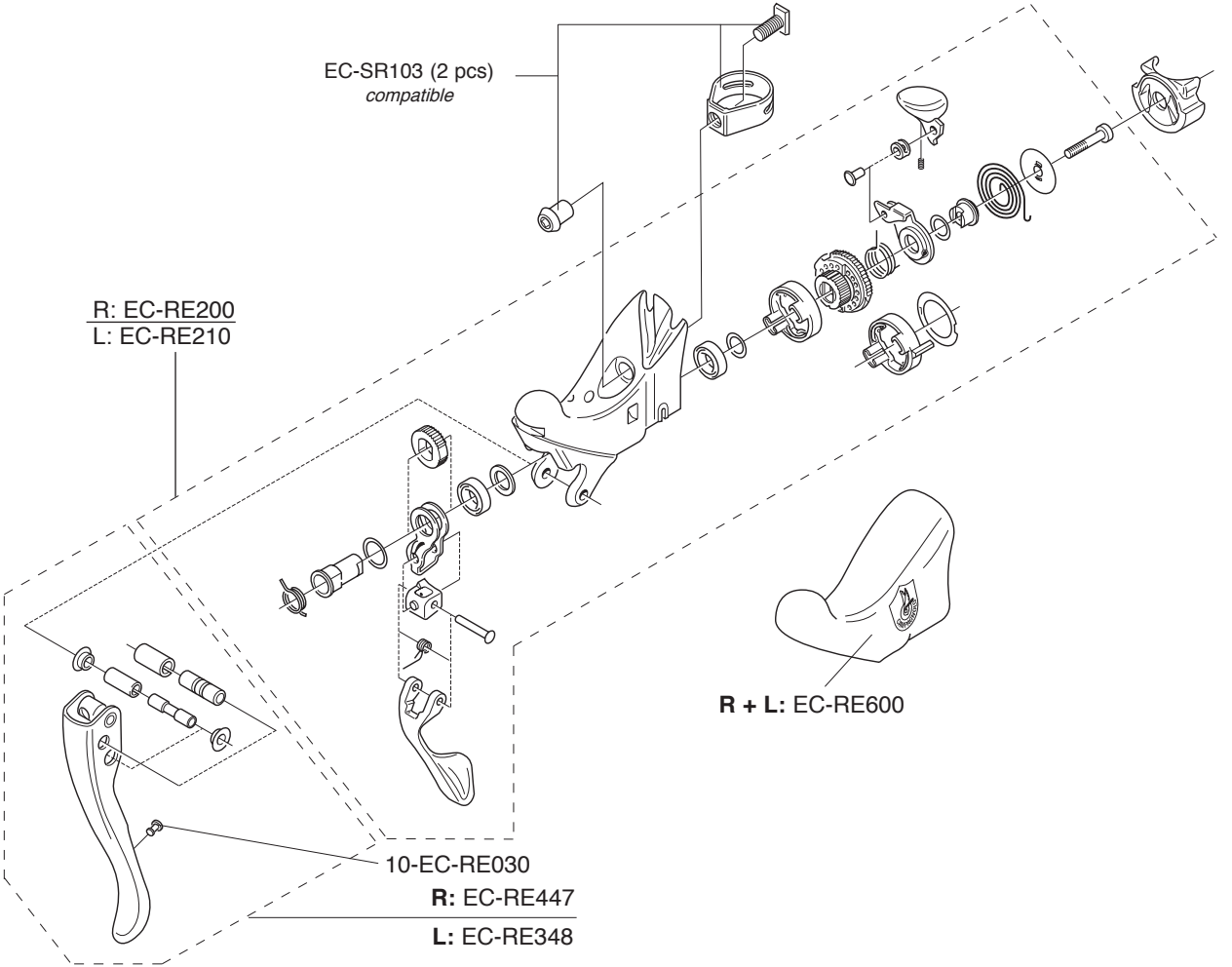

CHORUS 10S

QS

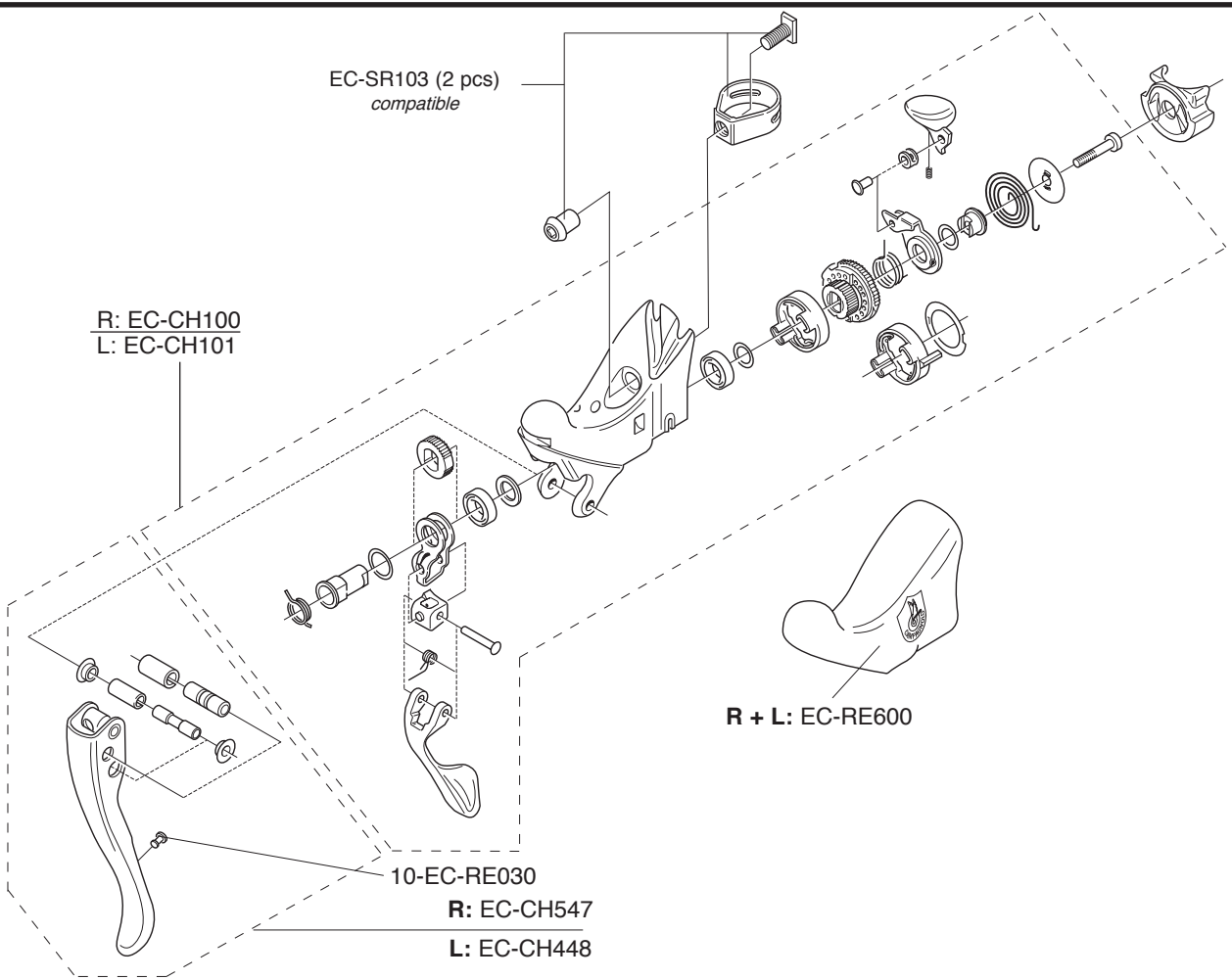

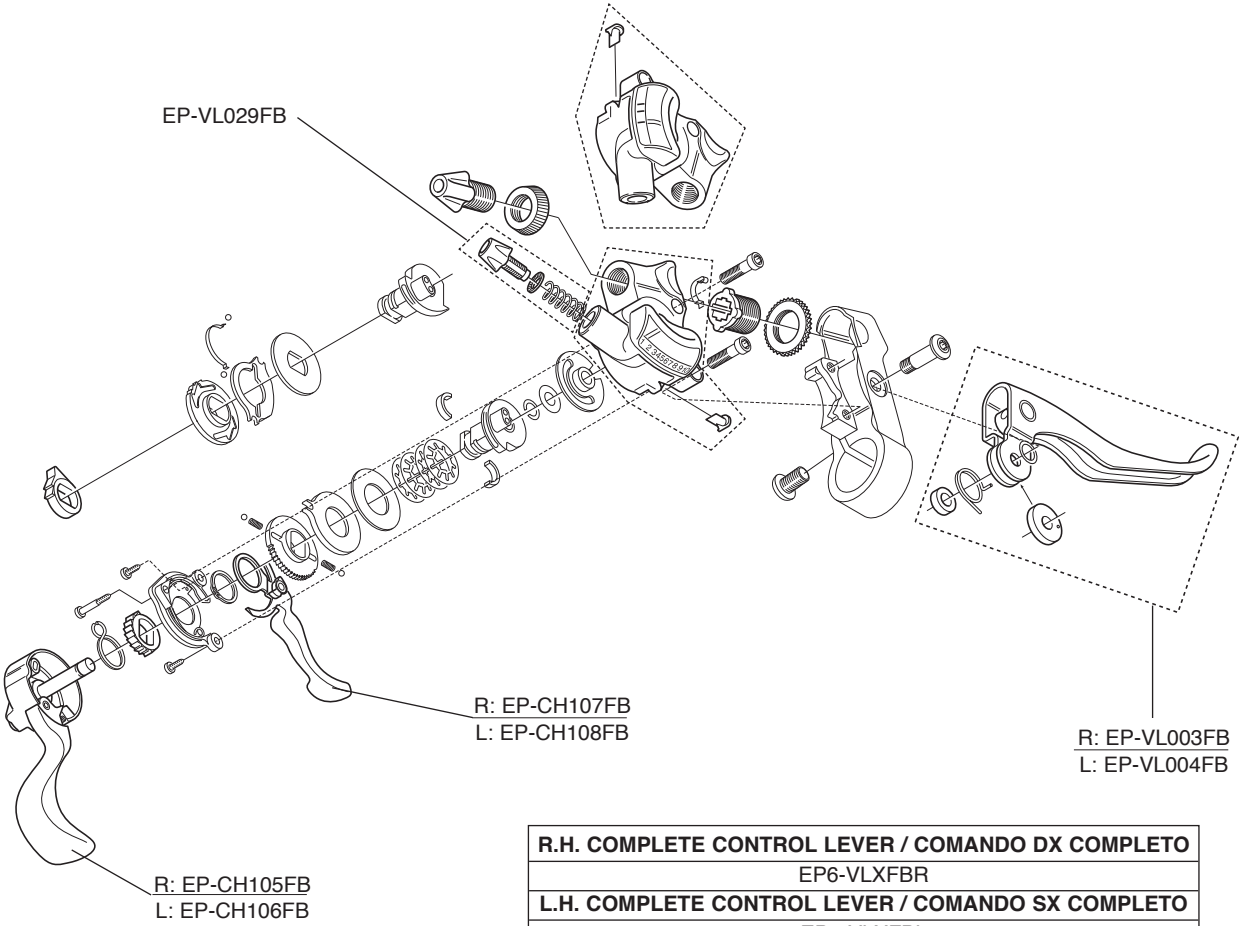

R.H. COMPLETE CONTROL LEVER / COMANDO DX COMPLETO
EP6-VLXFBR
L.H. COMPLETE CONTROL LEVER / COMANDO SX COMPLETO
EP6-VLXFBL

SUPER RECORD

SKELETON

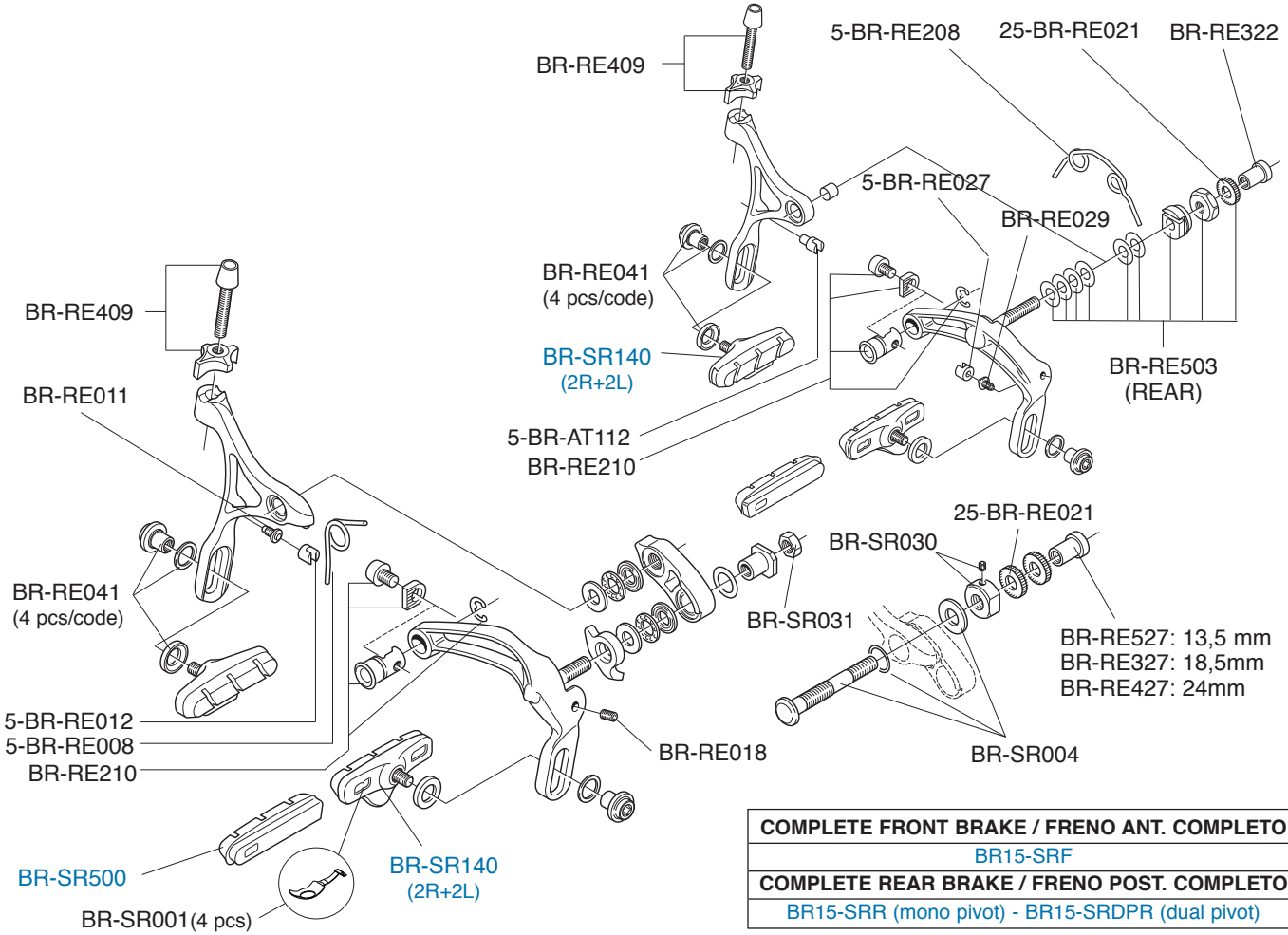

COMPLETE FRONT BRAKE / FRENO ANT. COMPLETO
BR15-SRF
COMPLETE REAR BRAKE / FRENO POST. COMPLETO
BR15-SRR (mono pivot) - BR15-SRDPR (dual pivot)

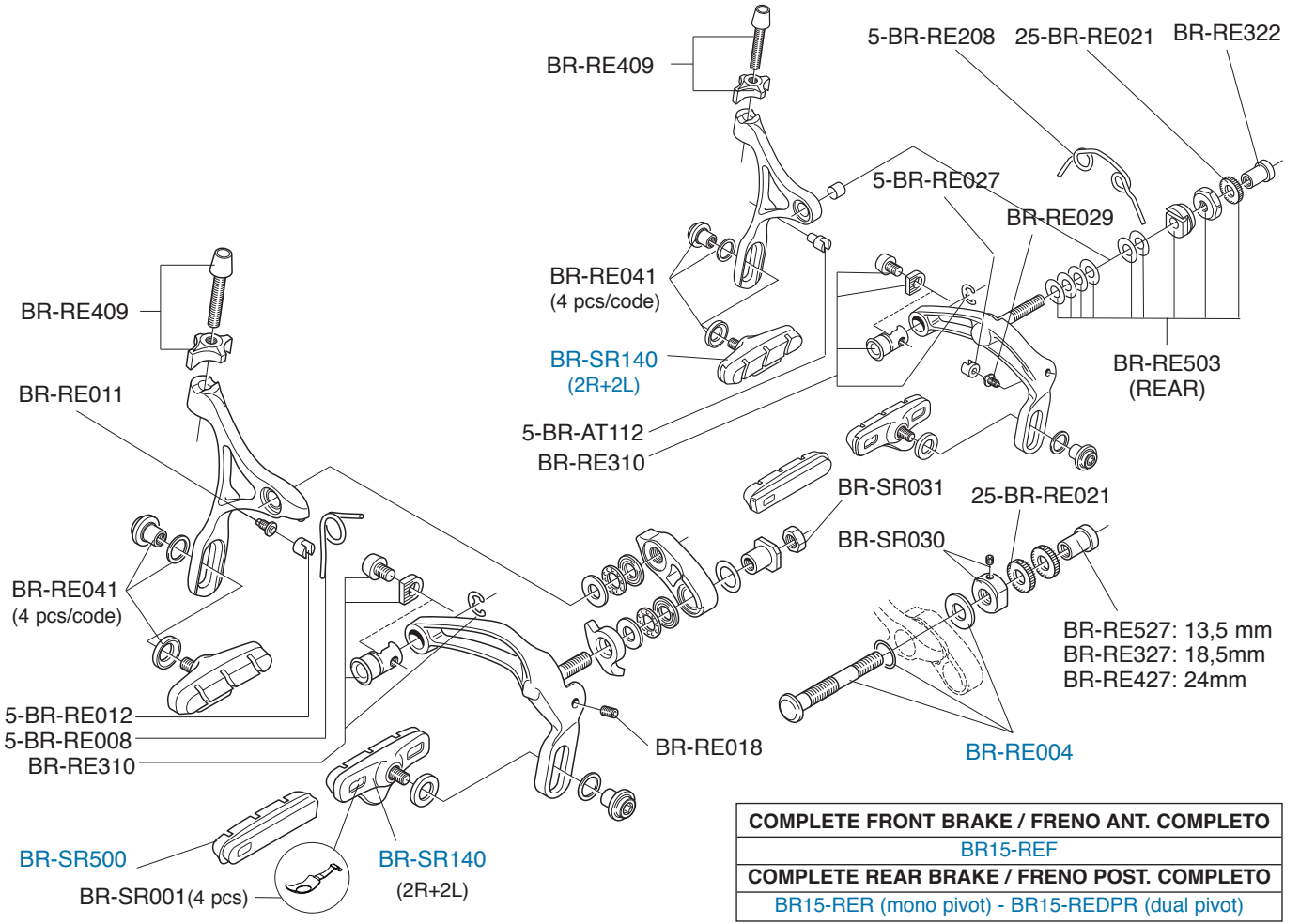

COMPLETE FRONT BRAKE / FRENO ANT. COMPLETO
BR15-REF
COMPLETE REAR BRAKE / FRENO POST. COMPLETO
BR15-RER (mono pivot) - BR15-REDPR (dual pivot)

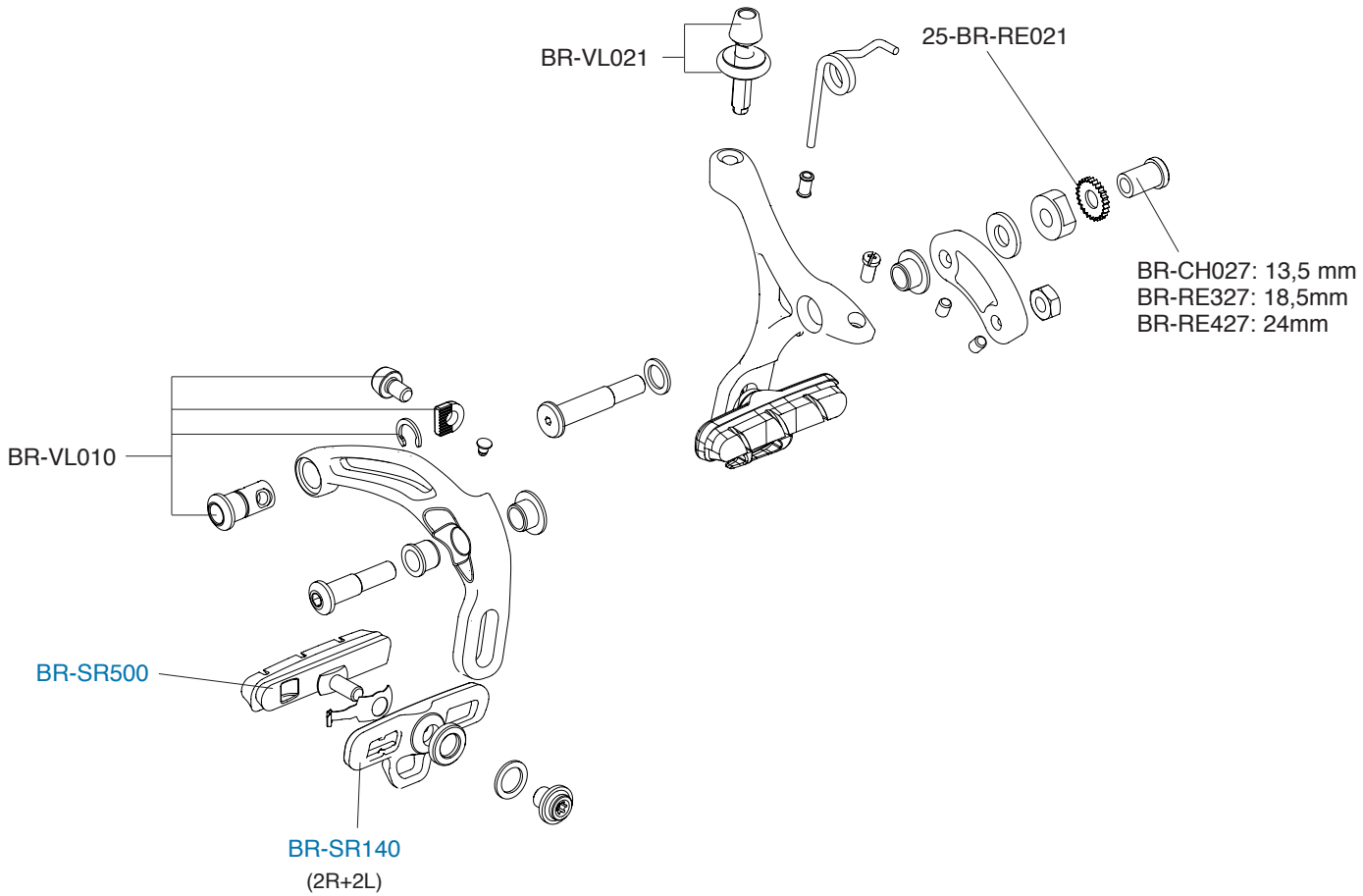
BR-VL021
25-BR-RE021
BR-CH027: 13,5 mm
BR-RE327: 18,5mm
BR-RE427: 24mm
BR-VL010
BR-SR500
BR-SR140
(2R+2L)

CAMPAGNOLO

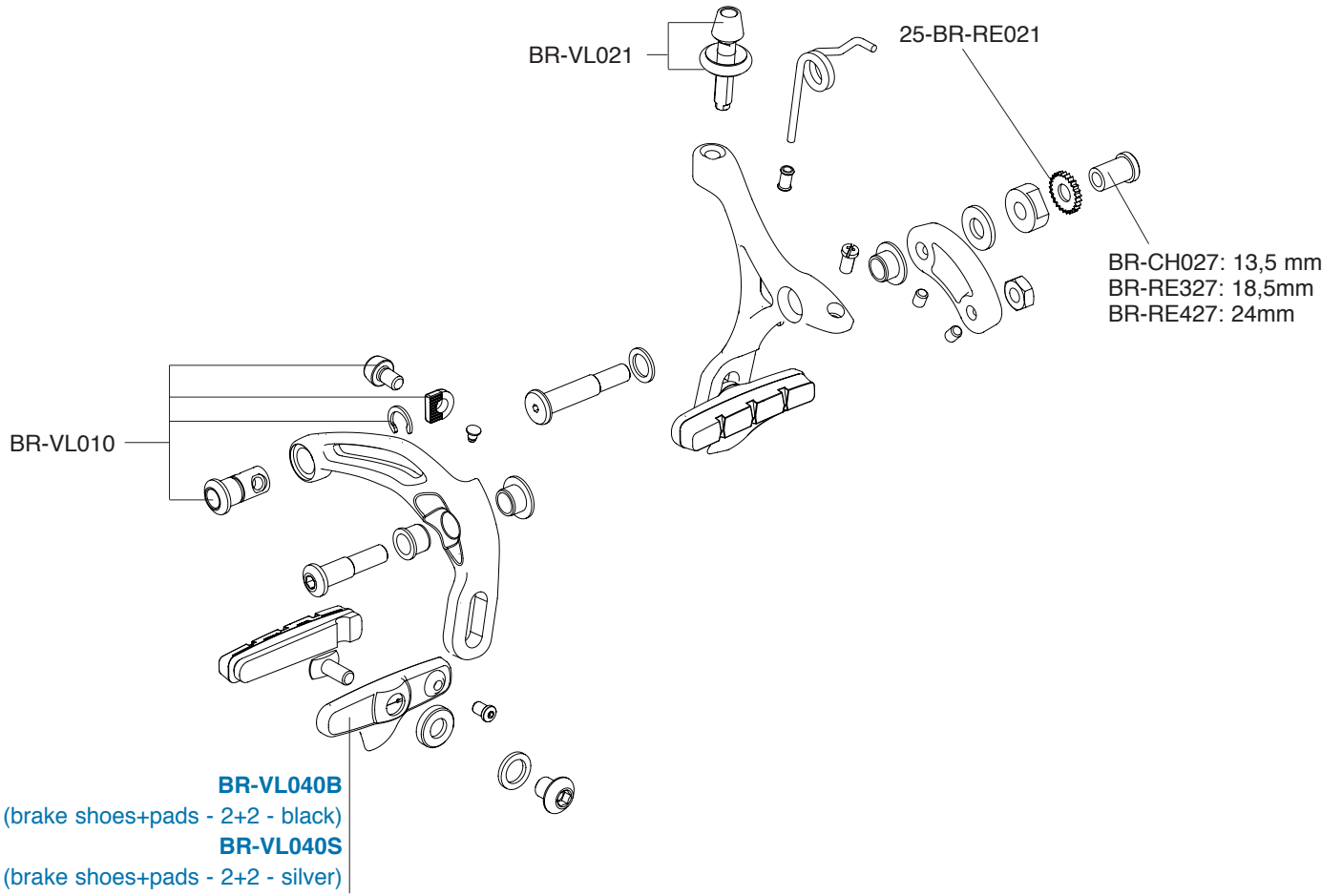
BR-VL021
25-BR-RE021
BR-CH027: 13,5 mm
BR-RE327: 18,5mm
BR-RE427: 24mm
BR-VL010
BR-VL040B
(brake shoes+pads - 2+2 - black)
BR-VL040S
(brake shoes+pads - 2+2 - silver)

VELOCE

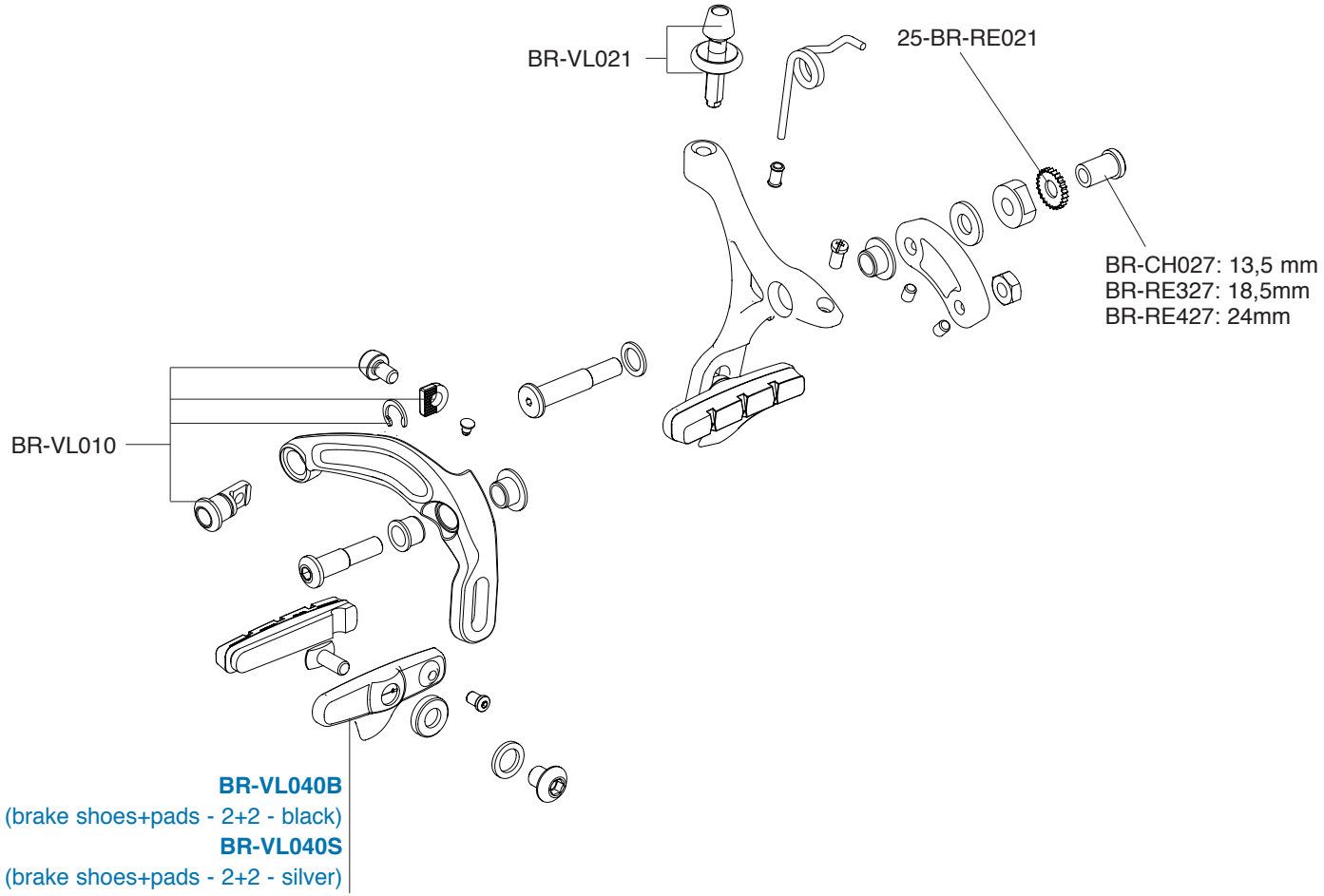
BR-VL021
25-BR-RE021
BR-CH027: 13,5 mm
BR-RE327: 18,5mm
BR-RE427: 24mm
BR-VL010
BR-VL040B
(brake shoes+pads - 2+2 - black)
BR-VL040S
(brake shoes+pads - 2+2 - silver)

SHIFTING LEVERS BAR-END EPS

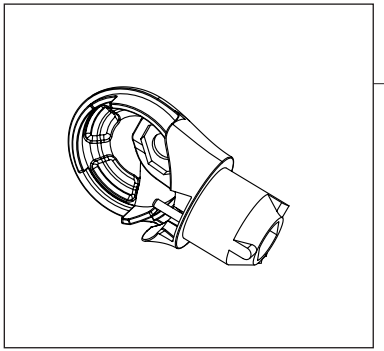

RECORD
RH: SL-RETT001EPS
LH: SL-RETT002EPS

CHORUS
RH: SL-CHTT001EPS
LH: SL-CHTT002EPS

SL-TT008EPS

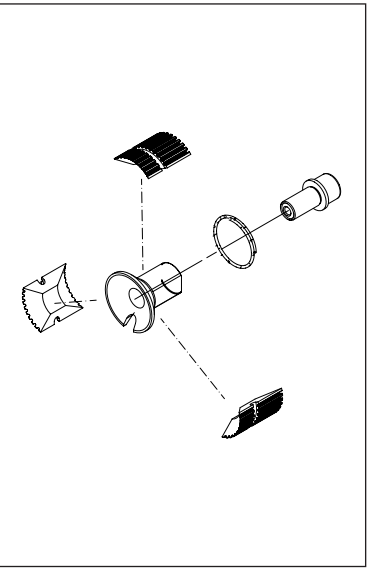

BRAKING LEVERS BAR-END EPS

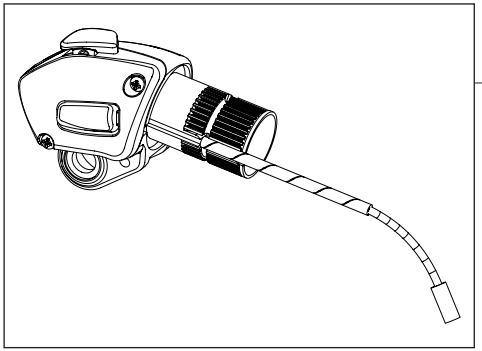

RECORD
RH: BL-RETT001EPS
LH: BL-RETT002EPS

CHORUS
RH: BL-ATTT001EPS
LH: BL-ATTT002EPS

SL-TT008EPS

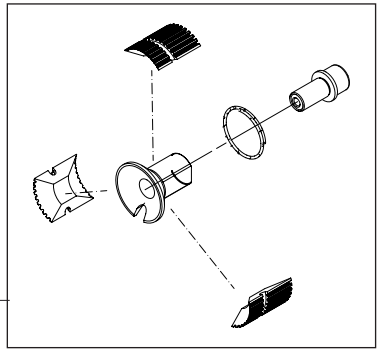

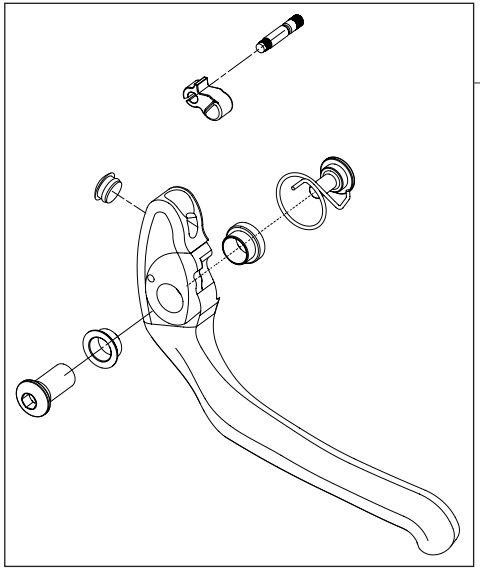

RECORD
RH: BL-RETT003EPS
LH: BL-RETT004EPS

CHORUS
RH: BL-CHTT003EPS
LH: BL-CHTT004EPS

SHIFTING LEVERS 10S - 11S

R.H. COMPLETE CONTROL LEVER / COMANDO DX COMPLETO
SL12-TT10R - SL12-TT11R - SL15-TT11CR
L.H. COMPLETE CONTROL LEVER / COMANDO SX COMPLETO
SL12-TT10L - SL12-TT11L - SL15-TT11CL

CABLES & CASINGS / CAVI E GUAINE
CG-SL500

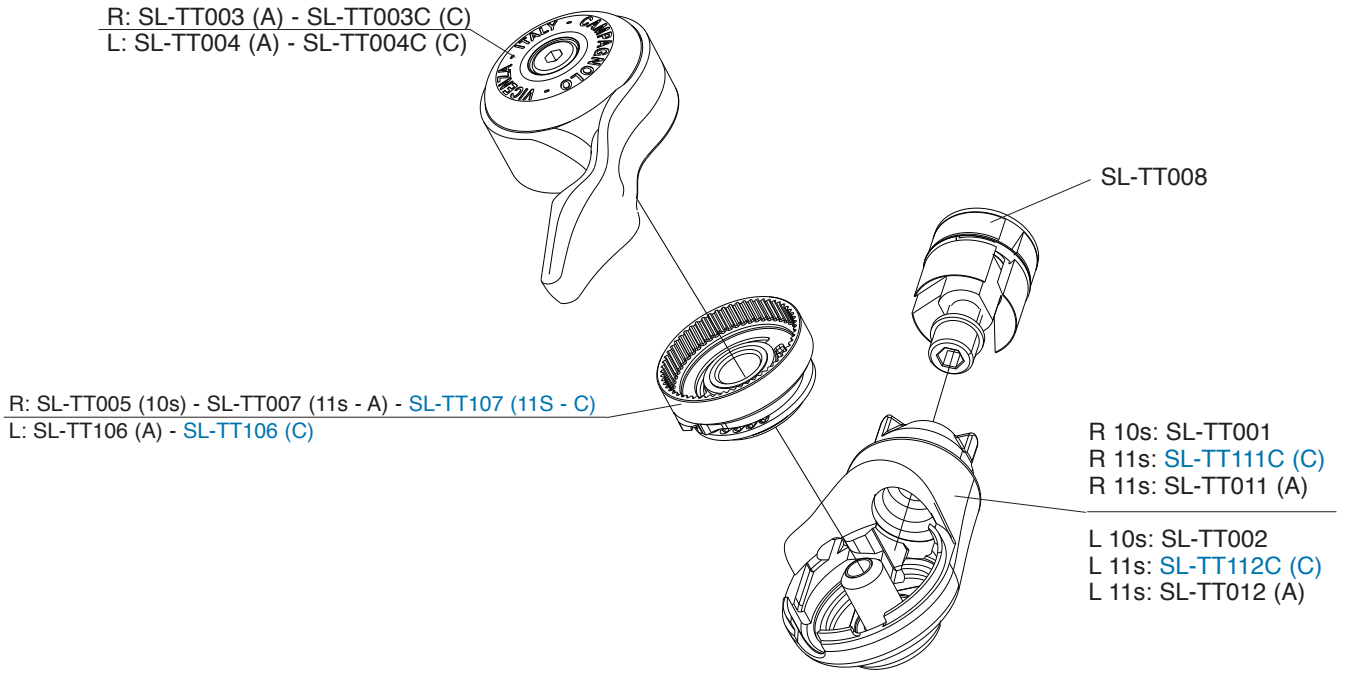

BRAKE LEVERS

R.H. COMPLETE BRAKE LEVER / LEVA FRENO DX COMPLETA
BL12-TTCR (carbon) - BL15-TTR (alu)
L.H. COMPLETE BRAKE LEVER / LEVA FRENO SX COMPLETA
BL12-TTCL (carbon) - BL15-TTL (alu)

CABLES & CASINGS / CAVI E GUAINE
CG-BL500

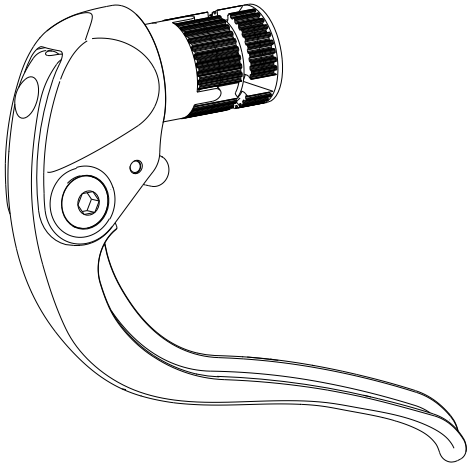

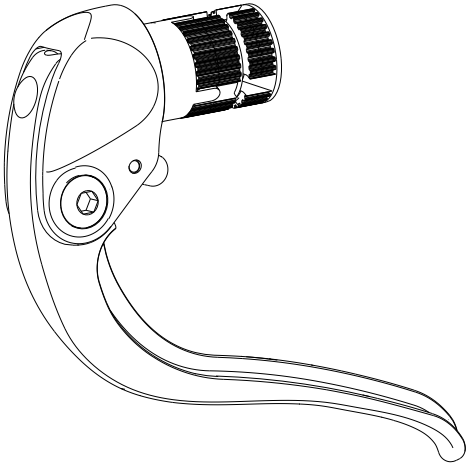

FRONT BRAKE

TT

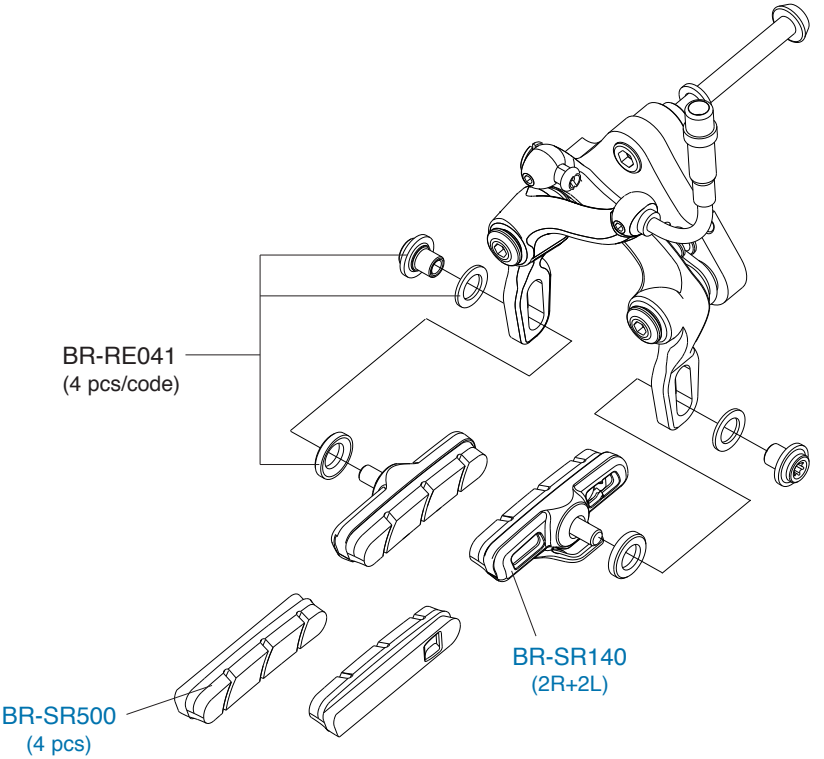

REAR BRAKES

TT

CENTRAL PULL

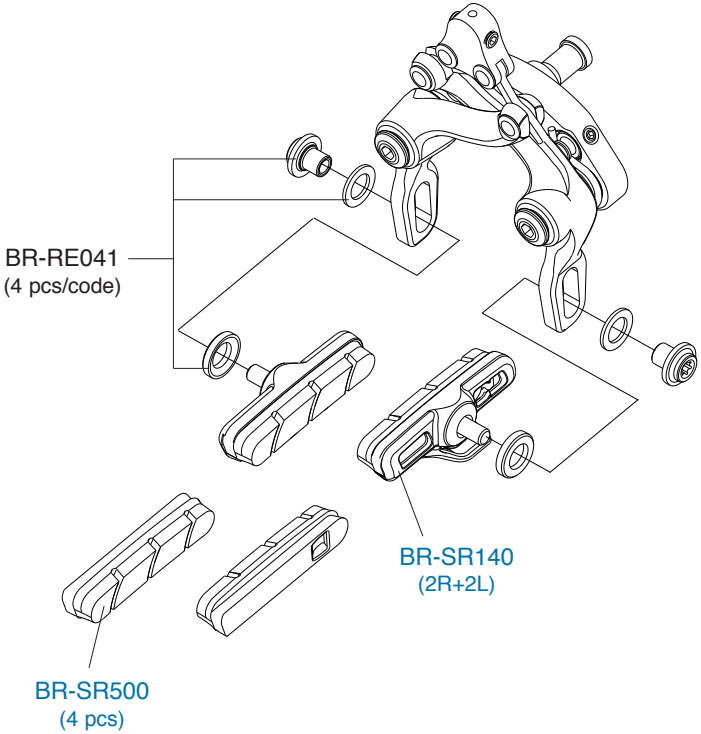

LATERAL PULL

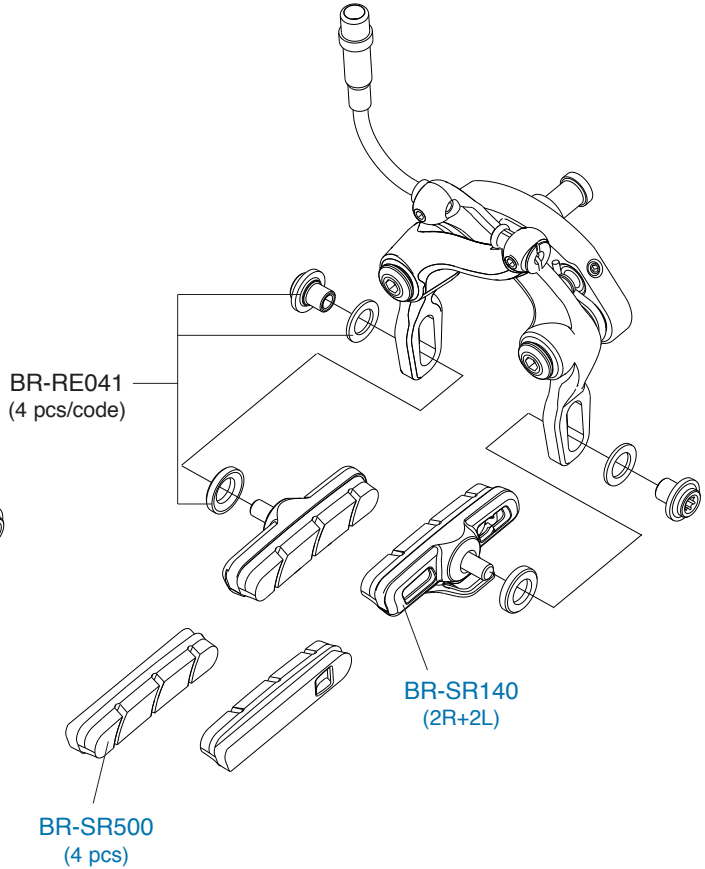

FRONT

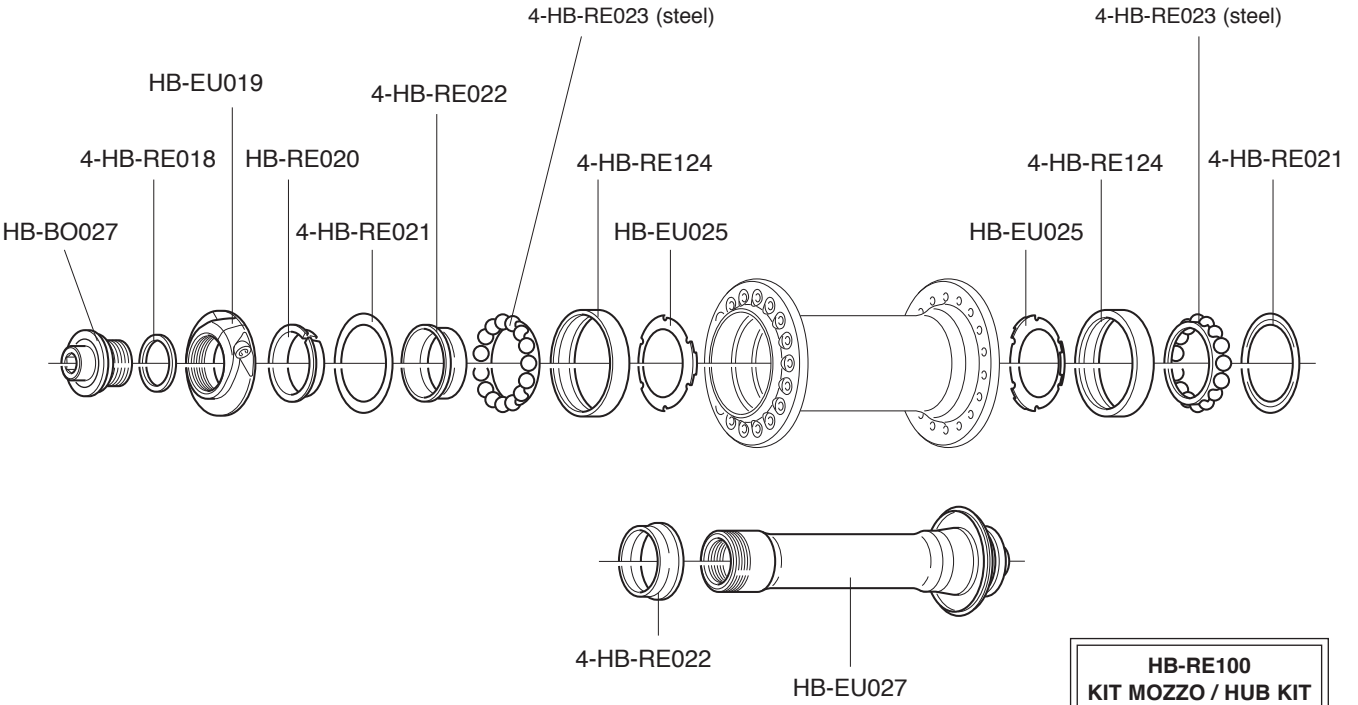

HB-RE100
KIT MOZZO / HUB KIT

2 x HB-RE021
2 x HB-RE022
2 x HB-RE124
2 x HB-RE023

HB-BO031 (3 pcs)
RATCHET RING /
INSERTO A
CREMAGLIERA
(SERVICE CENTER only)

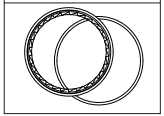

HB-RE100
KIT MOZZO / HUB KIT

2 x HB-RE021
2 x HB-RE022
2 x HB-RE124
2 x HB-RE023

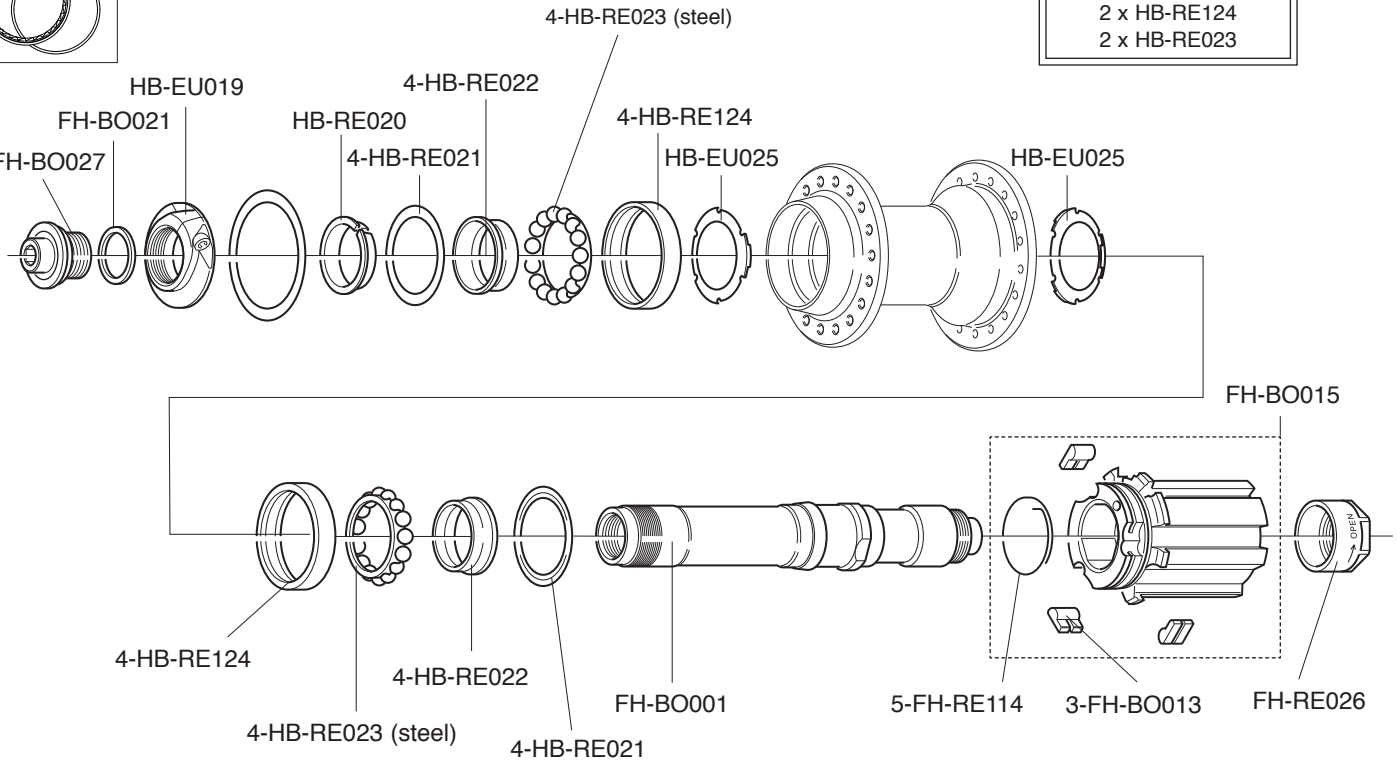

RECORD PISTA

FRONT - REAR

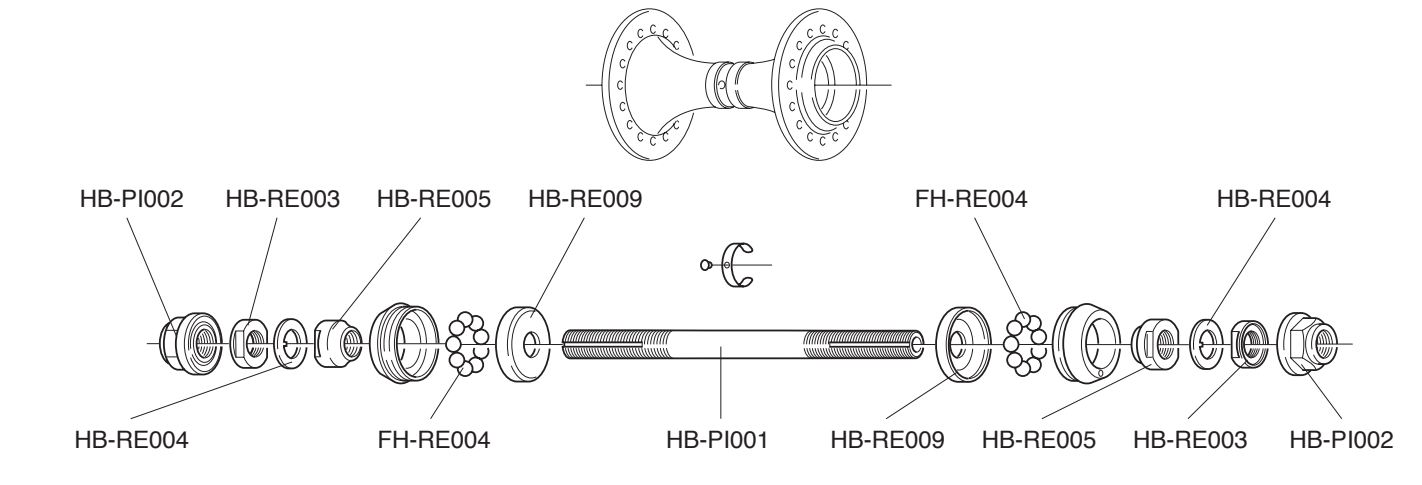

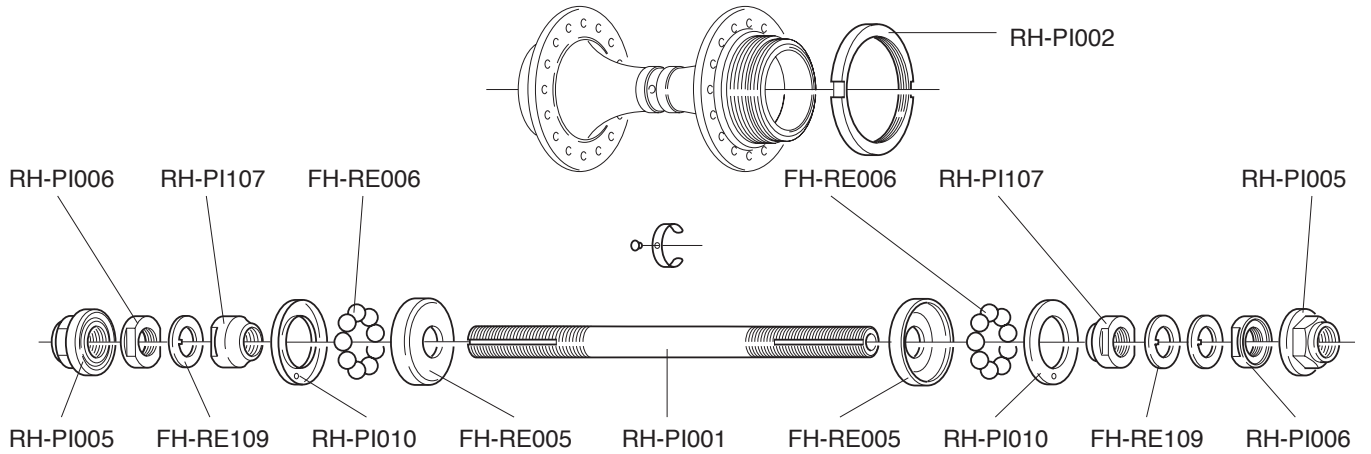

GHIERE - LOCKRINGS - ECROUS - VERSCHLUSSRING

	CODE CODICE	TYPE TIPO		RANGE GAMMA	HUB COMPATIBILITY COMPATIBILITÀ MOZZI
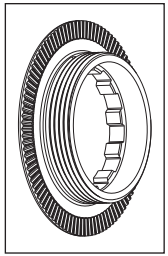	**CS-401**	***9s / 10s*** "oversize" thread/fil.: 27 x 1	steel / acciaio	2000 e succ. **2000 and following**	**all groups / tutti i gruppi** all wheels / tutte le ruote
				1999	**RECORD™ - CHORUS™** all wheels / tutte le ruote
	CS-501	***9s / 10s*** "oversize" thread/fil.: 27 x 1	steel / acciaio (for Z. 11)	2000 e succ. **2000 and following**	**all groups / tutti i gruppi** all wheels / tutte le ruote
				1999	**RECORD™ - CHORUS™** all wheels / tutte le ruote
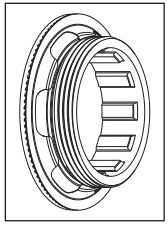	**CS-112**	11 SPEED™ ***only*** thread/fil.: 27 x 1	alloy / alluminio	2009 e succ. **2009 and following**	**only 11s sprocket sets / solo pacchi pignoni 11s**
	CS-111	11 SPEED™ ***only*** thread/fil.: 27 x 1	alloy / alluminio (for Z. 11)	2009 e succ. **2009 and following**	**only 11s sprocket sets / solo pacchi pignoni 11s**

SUPER RECORD 11S

STEEL - TITANIUM

A	CS-112	*11s only*
	CS-111	*11s only* (for Z 11)
F	2-CS-612 (2 pcs)	2,2 mm
R	2-CS-712 (2 pcs)	2,3 mm

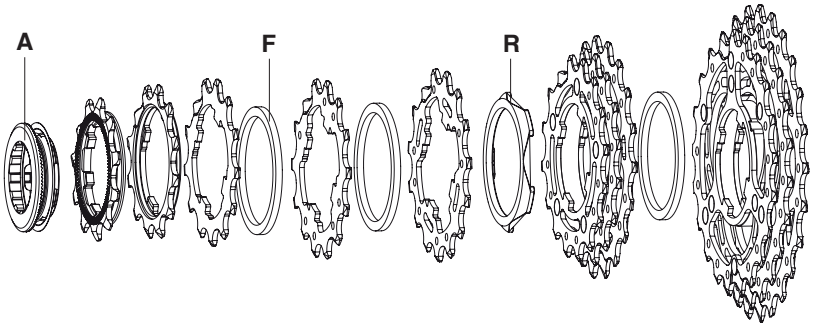

11-23	A	11A-1°	12A-2°	13A	F	14A	F	15A	R	16A-17A-18A*	F	19A-21A-23A*
		11S-011	11S-022	11S-131		11S-141		11S-151		11S-678T		11S-913T
11-25	A	11A-1°	12A-2°	13A	F	14A	F	15A	R	16A-17A-19B*	F	21B-23B-25B*
		11S-011	11S-022	11S-131		11S-141		11S-151		11S-679T		11S-135BT
11-27	A	11D-1°	12DD-2°	13D	F	14D	F	15D	R	17A-19B-21B*	F	23B-25B-27B*
		11S-111	11S-124	11S-134		11S-144		11S-154		11S-791T		11S-357T
11-29	A	11D-1°	12DD-2°	13D	F	14D	F	15D	R	17A-19B-21B*	F	23B-26B-29B*
		11S-111	11S-124	11S-134		11S-144		11S-154		11S-791T		11S-369T

*** pre-assembled**

SUPER RECORD 11S

STEEL - TITANIUM

A	CS-112	*11s only*
	CS-111	*11s only* (for Z 11)
F	2-CS-612 (2 pcs)	2,2 mm
R	2-CS-712 (2 pcs)	2,3 mm

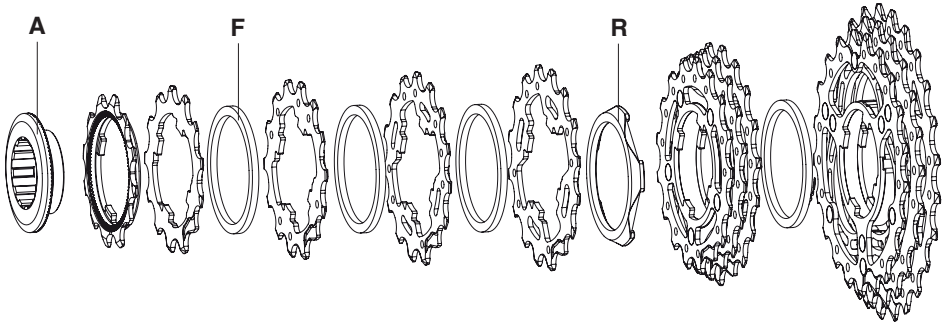

12-25	A	12A-1°	13A	F	14A	F	15A	F	16A	R	17A-18A-19A*	F	21A-23A-25A*
		11S-012	11S-131		11S-141		11S-151		11S-161		11S-789T		11S-135AT
12-27	A	12A-1°	13A	F	14A	F	15A	F	16A	R	17A-19B-21B*	F	23B-25B-27B*
		11S-012	11S-131		11S-141		11S-151		11S-161		11S-791T		11S-357T
12-29	A	12A-1°	13A	F	14A	F	15A	F	16A	R	17A-19B-21B*	F	23B-26C-29C*
		11S-012	11S-131		11S-141		11S-151		11S-161		11S-791T		11S-369T

*** pre-assembled**

RECORD 11S

STEEL - TITANIUM

A	CS-112	*11s only*
	CS-111	*11s only* (for Z 11)
F	2-CS-612 (2 pcs)	2,2 mm
R	2-CS-712 (2 pcs)	2,3 mm

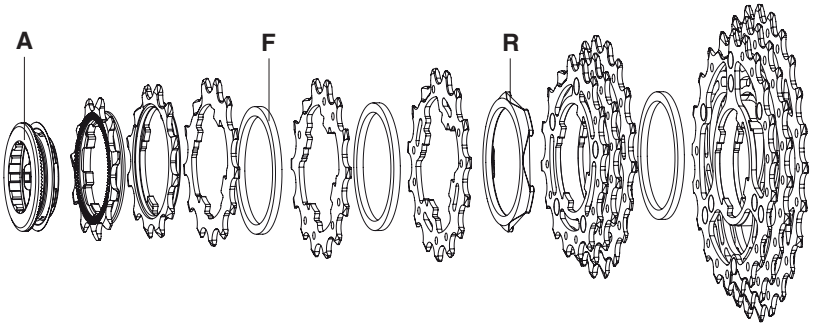

11-23	A	11A-1°	12A-2°	13A	F	14A	F	15A	R	16A-17A-18A*	F	19A-21A-23A*
		11S-011	11S-022	11S-131		11S-141		11S-151		11S-678		11S-913T
11-25	A	11A-1°	12A-2°	13A	F	14A	F	15A	R	16A-17A-19B*	F	21B-23B-25B*
		11S-011	11S-022	11S-131		11S-141		11S-151		11S-679		11S-135BT
11-27	A	11D-1°	12DD-2°	13D	F	14D	F	15D	R	17A-19B-21B	F	23B-25B-27B*
		11S-111	11S-124	11S-134		11S-144		11S-154		11S-791		11S-357T
11-29	A	11D-1°	12DD-2°	13D	F	14D	F	15D	R	17A-19B-21B	F	23B-26B-29B*
		11S-111	11S-124	11S-134		11S-144		11S-154		11S-791		11S-369T

*** pre-assembled**

RECORD 11S

STEEL - TITANIUM

A	CS-112	*11s only*
	CS-111	*11s only* (for Z 11)
F	2-CS-612 (2 pcs)	2,2 mm
R	2-CS-712 (2 pcs)	2,3 mm

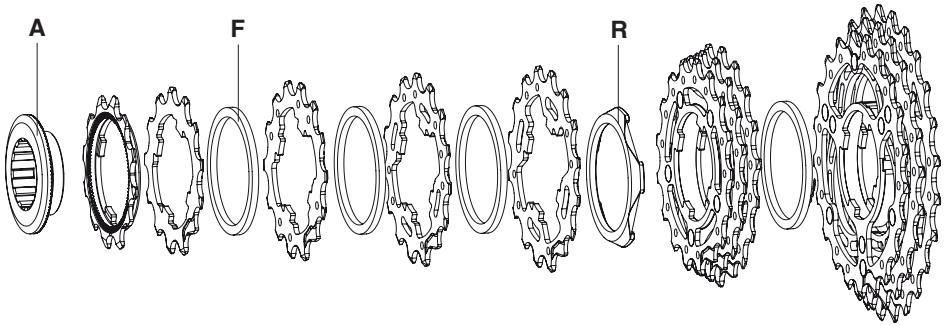

12-25	A	12A-1°	13A	F	14A	F	15A	F	16A	R	17A-18A-19A*	F	21A-23A-25A*
		11S-012	11S-131		11S-141		11S-151		11S-161		11S-789		11S-135AT
12-27	A	12A-1°	13A	F	14A	F	15A	F	16A	R	17A-19B-21B*	F	23B-25B-27B*
		11S-012	11S-131		11S-141		11S-151		11S-161		11S-791		11S-357T
12-29	A	12A-1°	13A	F	14A	F	15A	F	16A	R	17A-19B-21B*	F	23B-26C-29C*
		11S-012	11S-131		11S-141		11S-151		11S-161		11S-791		11S-369T

*** pre-assembled**

CHORUS 11S

STEEL

A	CS-112	*11s only*
	CS-111	*11s only* (for Z 11)
F	2-CS-612 (2 pcs)	2,2 mm
R	2-CS-712 (2 pcs)	2,3 mm

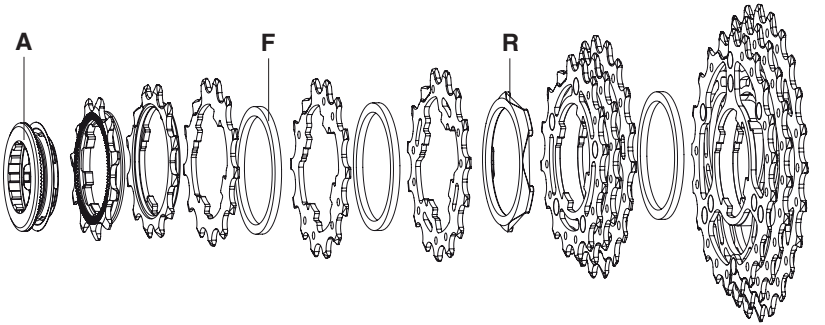

11-23	A	11A-1°	12A-2°	13A	F	14A	F	15A	R	16A-17A-18A*	F	19A-21A-23A*
		11S-011	11S-022	11S-131		11S-141		11S-151		11S-678		11S-913
11-25	A	11A-1°	12A-2°	13A	F	14A	F	15A	R	16A-17A-19B*	F	21B-23B-25B*
		11S-011	11S-022	11S-131		11S-141		11S-151		11S-679		11S-135B
11-27	A	11D-1°	12DD-2°	13D	F	14D	F	15D	R	17A-19B-21B	F	23B-25B-27B
		11S-111	11S-124	11S-134		11S-144		11S-154		11S-791		11S-357
11-29	A	11D-1°	12DD-2°	13D	F	14D	F	15D	R	17A-19B-21B	F	23B-26B-29B
		11S-111	11S-124	11S-134		11S-144		11S-154		11S-791		11S-369

*** pre-assembled**

CHORUS 11S

STEEL

A	CS-112	*11s only*
	CS-111	*11s only* (for Z 11)
F	2-CS-612 (2 pcs)	2,2 mm
R	2-CS-712 (2 pcs)	2,3 mm

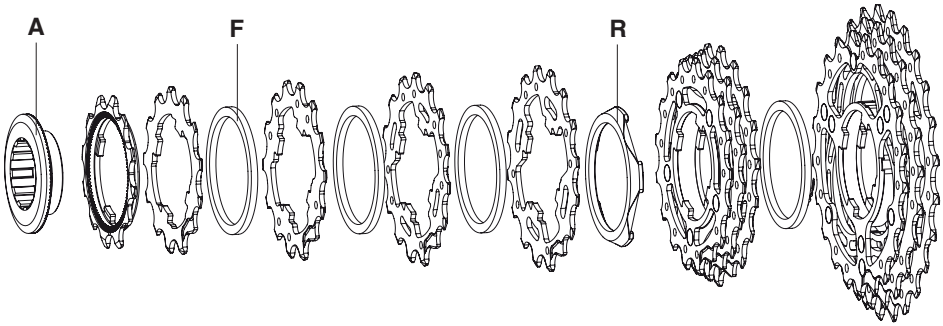

12-25	A	12A-1°	13A	F	14A	F	15A	F	16A	R	17A-18A-19A*	F	21A-23A-25A*
		11S-012	11S-131		11S-141		11S-151		11S-161		11S-789		11S-135A
12-27	A	12A-1°	13A	F	14A	F	15A	F	16A	R	17A-19B-21B*	F	23B-25B-27B*
		11S-012	11S-131		11S-141		11S-151		11S-161		11S-791		11S-357
12-29	A	12A-1°	13A	F	14A	F	15A	F	16A	R	17A-19B-21B*	F	23B-26C-29C*
		11S-012	11S-131		11S-141		11S-151		11S-161		11S-791		11S-369

*** pre-assembled**

CENTAUR 10S

VELOCE 10S COMPATIBLE

DISTANZIALI / SPACERS
G = CS-602 (2,55 mm)
M = CS-606 (3,05 mm)
N = CS-607 (2,4 mm)
O = CS-609 (2,55 mm)
P = CS-608 (1,6 mm)
Q = CS-610 (2,4 mm)

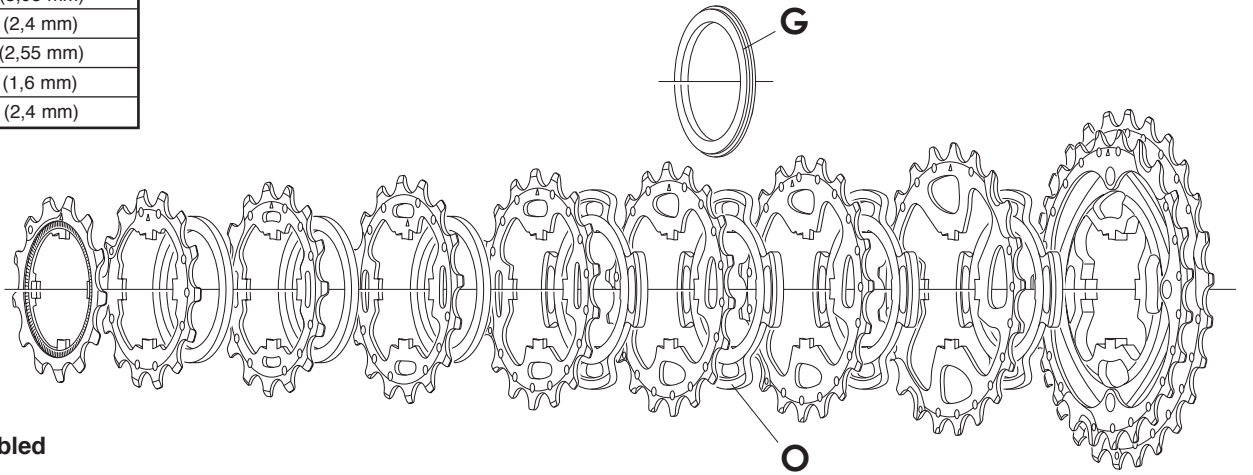

*** pre-assembled**

11 - 23	**11A-1°** 10S-011	**12A-2°** 10S-022	**13A** 10S-131	**Q**	**14A** 10S-141	**Q**	**15A** 10S-151	**Q**	**16A** 10S-161	**G**	**17A** 10S-171	**N**	**19A** 10S-191	**M**	**21A-23A*** 10S-13A			
11 - 25	**11A-1°** 10S-011	**12A-2°** 10S-022	**13A** 10S-131	**Q**	**14A** 10S-141	**Q**	**15A** 10S-151	**Q**	**17G** 10S-177	**O**	**19G** 10S-197	**N**	**21G** 10S-217	**M**	**23G-25G*** 10S-35G			
12 - 25	**12A-1°** 10S-032	**13A** 10S-131	**Q**	**14A** 10S-141	**Q**	**15A** 10S-151	**Q**	**16A** 10S-161	**Q**	**17A** 10S-171	**O**	**19A** 10S-191	**N**	**21A** 10S-211	**M**	**23A-25A*** 10S-35A		
13 - 26	**13A-1°** 10S-023	**14A** 10S-141	**Q**	**15A** 10S-151	**Q**	**16A** 10S-161	**Q**	**17A** 10S-171	**N**	**18C** 10S-183	**O**	**19C** 10S-193	**N**	**21C** 10S-213	**M**	**23C-26C*** 10S-36C		
13 - 29	**13A-1°** 10S-023	**14A** 10S-141	**Q**	**15A** 10S-151	**Q**	**16A** 10S-161	**Q**	**17A** 10S-171	**N**	**19A** 10S-191	**O**	**21A** 10S-211	**N**	**23A** 10S-231	**M**	**26A-29A*** 10S-69A		
14 - 23	**14A-1°** 10S-014	**15A** 10S-151	**Q**	**16A** 10S-161	**Q**	**17A** 10S-171	**Q**	**18C** 10S-183	**N**	**19C** 10S-193	**O**	**20D** 10S-204	**N**	**21D** 10S-214	**N**	**22D** 10S-224	**P**	**23D** 10S-234

CENTAUR 10S

STEEL

K	**2-CS-812** (2 pcs)	**2,6 mm**

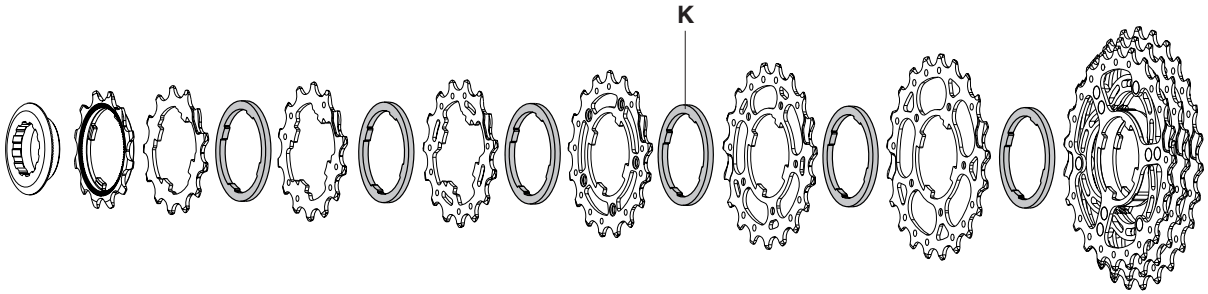

12 - 27	**12D-1°** 10S-042	**13D** 10S-134	**K**	**14D** 10S-144	**K**	**15D** 10S-154	**K**	**17A** 10S-17127	**K**	**19B** 10S-192	**K**	**21B** 10S-212	**K**	**23B-25B-27B*** 10S-357
12 - 30	**12D-1°** 10S-042	**13D** 10S-134	**K**	**14D** 10S-144	**K**	**15D** 10S-154	**K**	**17A** 10S-17127	**K**	**19B** 10S-192	**K**	**21B** 10S-212	**K**	**24B-27B-30B*** 10S-470

*** pre-assembled**

A	CS-111	*11s only* (for Z 11)	R	2-CS-712 (2 pcs)	2,3 mm
F	2-CS-612 (2 pcs)	2,2 mm	S	CS-613 (2 pcs)	2,5 mm

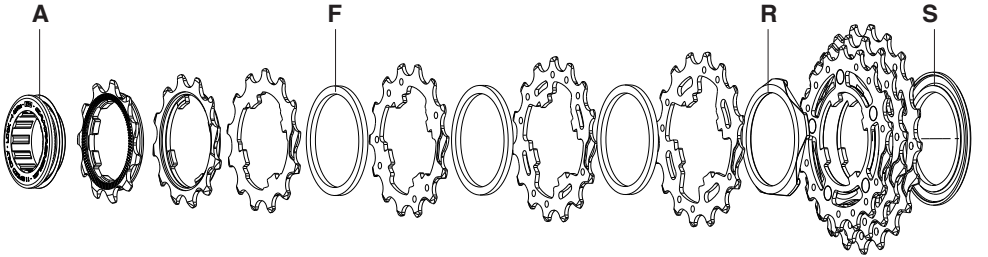

11-21	A	11A-1°	12A-2°	13A	F	14A	F	15A	F	16A	R	17A-19A-21A*	S
		11S-011	11S-022	11S-131		11S-141		11S-151		11S-161		11S-791	

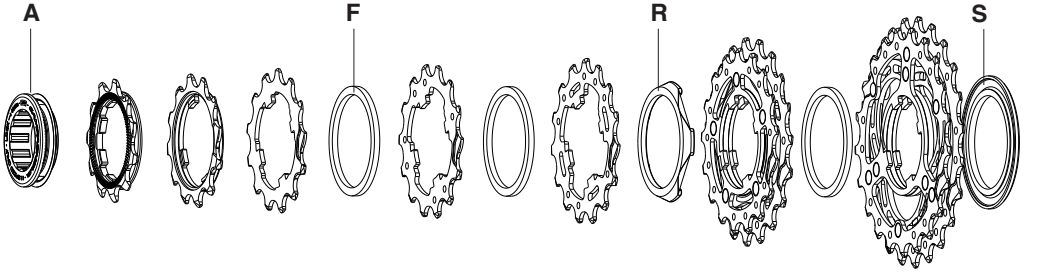

11-23	A	11A-1°	12A-2°	13A	F	14A	F	15A	R	17A-19A*	F	21A-23A*	S
		11S-011	11S-022	11S-131		11S-141		11S-151		11S-79GH		11S-13GH	

R + L: PD-RE105

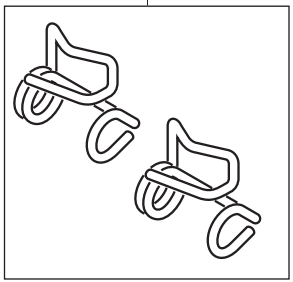

PD-RE116

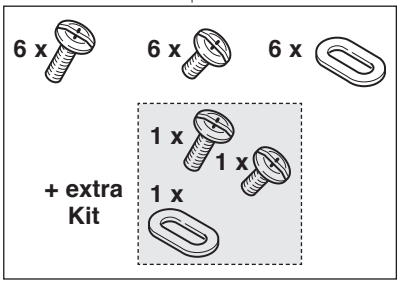

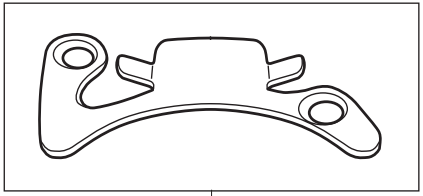

PRO-FIT™
PD-RE111

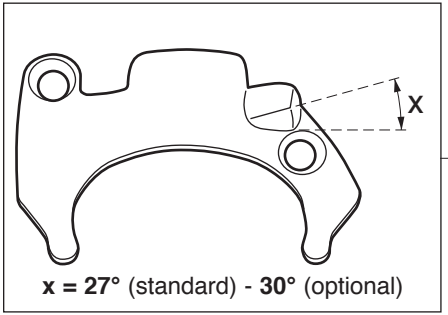

x = 27° (standard) - **30°** (optional)

PRO-FIT PLUS™
PD-RE110: standard - 27°
PD-RE109: HRE - optional - 30°

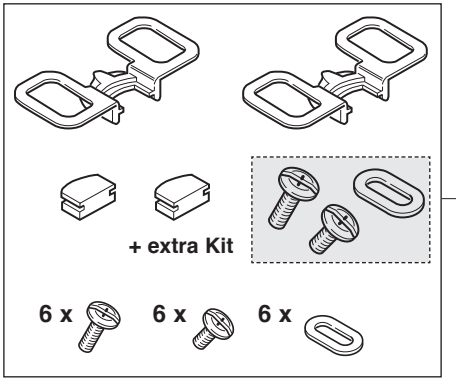

PD-RE200

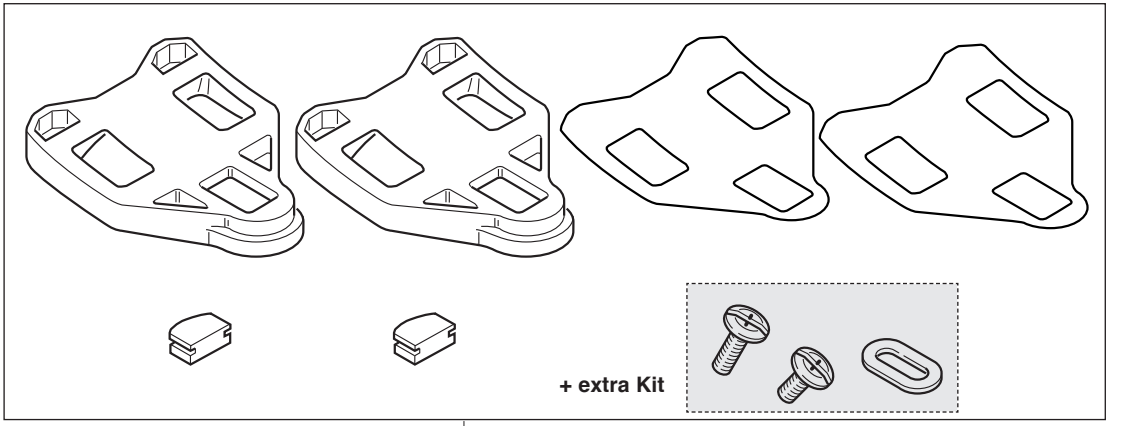

PD-RE020 FLOATING CLEATS **- PD-RE021** FIXED CLEATS

COMPLETE SET		
	BLACK	CG-ER600
	WHITE	CG-ER600W
	RED	CG-ER600R

		FRONT	REAR
BRAKES		Ø 1,6 mm L. 800 mm **CG-CB003**	Ø 1,6 mm L. 1600 mm **10-CG-CB013** (10 pcs.)
DERAILLEURS	Ø 1,2 mm	L. 1600 **CG-CB014**	
		L. 2000 **10-CG-CB009** (10 pcs.)	
		Ø 5,7 mm **10-CG-CS112** (for CG-CS115 and CG-CS108 - sealed / con guarnizione - 10 pcs.)	
		Ø 5,7/4 mm **5-CG-CS113** (for CG-CS115 and CG-CS108 - sealed / con guarnizione - 5 pcs.)	
		CG-CB001 (casings tension adjuster / regolatore tensione guaine - 5 pcs.)	
		CG-CB101 (cable tension adjuster / regolatore tensione cavo - 5 pcs.)	

ALL VERSIONS (except for ULTRA-SHIFT & POWER-SHIFT)

		FRONT	REAR
BRAKES		Ø 1,6 mm L. 800 mm **CG-CB003**	Ø 1,6 mm L. 1600 mm **10-CG-CB013** (10 pcs.)
BRAKES		Ø 6 mm **10-CG-CS011** (10 pcs.) (not sealed / senza guarnizione)	

DERAILLEURS	Ø 1,2 mm	ERGOPOWER	L. 1600	**CG-CB014**
		ERGOPOWER	L. 2000	**10-CG-CB009** (10 pcs.)
DERAILLEURS		Ø 5,7 mm **10-CG-CS012** (for CG-CS015 and CG-CS008 - sealed / con guarnizione - 10 pcs.)		
DERAILLEURS		Ø 5,7/4 mm **5-CG-CS013** (for CG-CS015 and CG-CS008 - sealed / con guarnizione - 5 pcs.)		

TRADITIONAL LEVERS: CG-BR201 (brakes) - CG-DD101 (derailleurs)

BORA ULTRA 80

TUBULAR

RIM

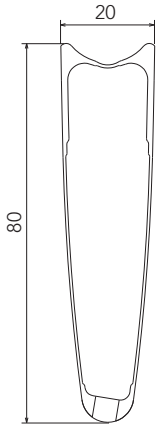

FRONT RIM	WH-101BO80 (bright) - WH-101BO80DK (dark)
REAR RIM	WH-102BO80 (bright) - WH-102BO80DK (dark)
VALVE HOLE	6,5 mm
VALVE EXTENSION	UT-WH160M (male extension) - UT-WH160F (female extension)
VALVE HOLE BUSHING	WH-BUU002 (5 pcs.)
DIAMETER	634 mm
BRAKE SHOES	for carbon rims - BR-BO500 (for brakes with retention spring or interference fixing) - BR-BO500X (for brakes with screw fixing)

SPOKES

FRONT SPOKE	WH-016BOT80	4 spokes + 4 nipples
REAR RH SPOKE	WH-018BOT80	4 spokes + 4 nipples
REAR LH SPOKE	WH-019BOT80	4 spokes + 4 nipples
NIPPLES	WH-015BO80	black - 10 pieces
NIPPLE INSERT	UT-WH160	magnet-attractor for nipple
NIPPLE MAGNET	UT-WH050	nipple-guide
SPOKE SPANNER	UT-WH090	spoke wrenches

ACCESSORIES

Spacer for HG11 FW body	FH-BUU001	5 pcs - to be used only with 9/10s sprockets *(please note that every HG11 rear wheel/HG11 FW body package contains the spacer)*

⚠ WARNING!

Because of the high temperatures reached when breaking, we recommend you use only glue for tubular tires specifically for carbon fibre rims.
A causa delle alte temperature raggiunte in frenata, vi consigliamo di utilizzare solamente colla per tubolari che sia specifica per i soli cerchi in fibra di carbonio.

BORA ULTRA 80

TUBULAR

HUBS

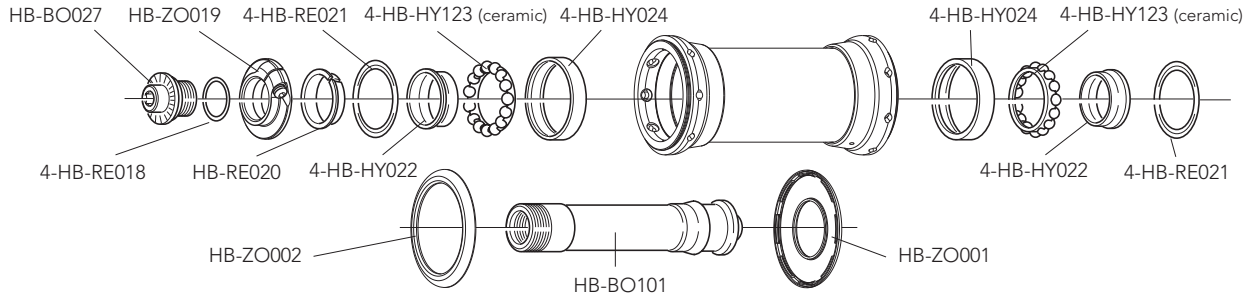

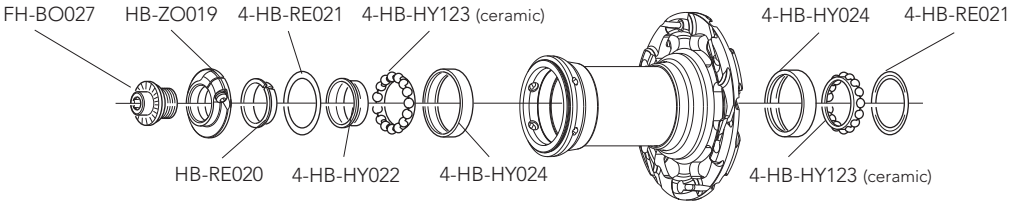

HB-HY100 CULT™ KIT

2 x HB-RE021
2 x HB-HY022
2 x HB-HY024
2 x HB-HY123

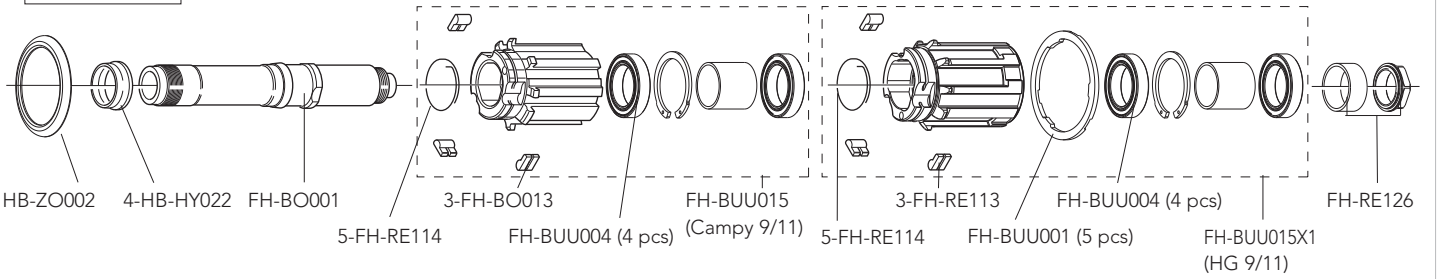

QUICK-RELEASES	QR12-BUUBFR	front + rear

BORA ULTRA 50

TUBULAR

RIM

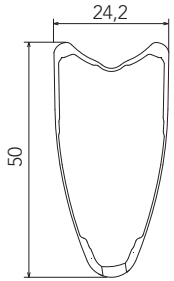

FRONT RIM	WH-001BO50 (bright) / WH-001BO50DK (dark)
REAR RIM	WH-002BO50 (bright) / WH-002BO50DK (dark)
VALVE HOLE	6,5 mm
VALVE HOLE BUSHING	WH-BUU002 (5 pcs.)
VALVE EXTENSION	UT-HU150
DIAMETER	634 mm
BRAKE SHOES	for carbon rims - BR-BO500 (for brakes with retention spring or interference fixing) - BR-BO500X (for brakes with screw fixing)

SPOKES

FRONT / REAR RH SPOKE	WH-016BOT50	4 spokes + 4 nipples
REAR LH SPOKE	WH-019BOT50	4 spokes + 4 nipples
NIPPLES	WH-015BO80	black - 10 pieces
NIPPLE INSERT	UT-WH160	magnet-attractor for nipple
NIPPLE MAGNET	UT-WH050	nipple-guide
SPOKE SPANNER	UT-WH090	spoke wrenches

ACCESSORIES

Spacer for HG11 FW body	FH-BUU001	5 pcs - to be used only with 9/10s sprockets *(please note that every HG11 rear wheel/HG11 FW body package contains the spacer)*

⚠ WARNING!

Because of the high temperatures reached when breaking, we recommend you use only glue for tubular tires specifically for carbon fibre rims.
A causa delle alte temperature raggiunte in frenata, vi consigliamo di utilizzare solamente colla per tubolari che sia specifica per i soli cerchi in fibra di carbonio.

HUBS

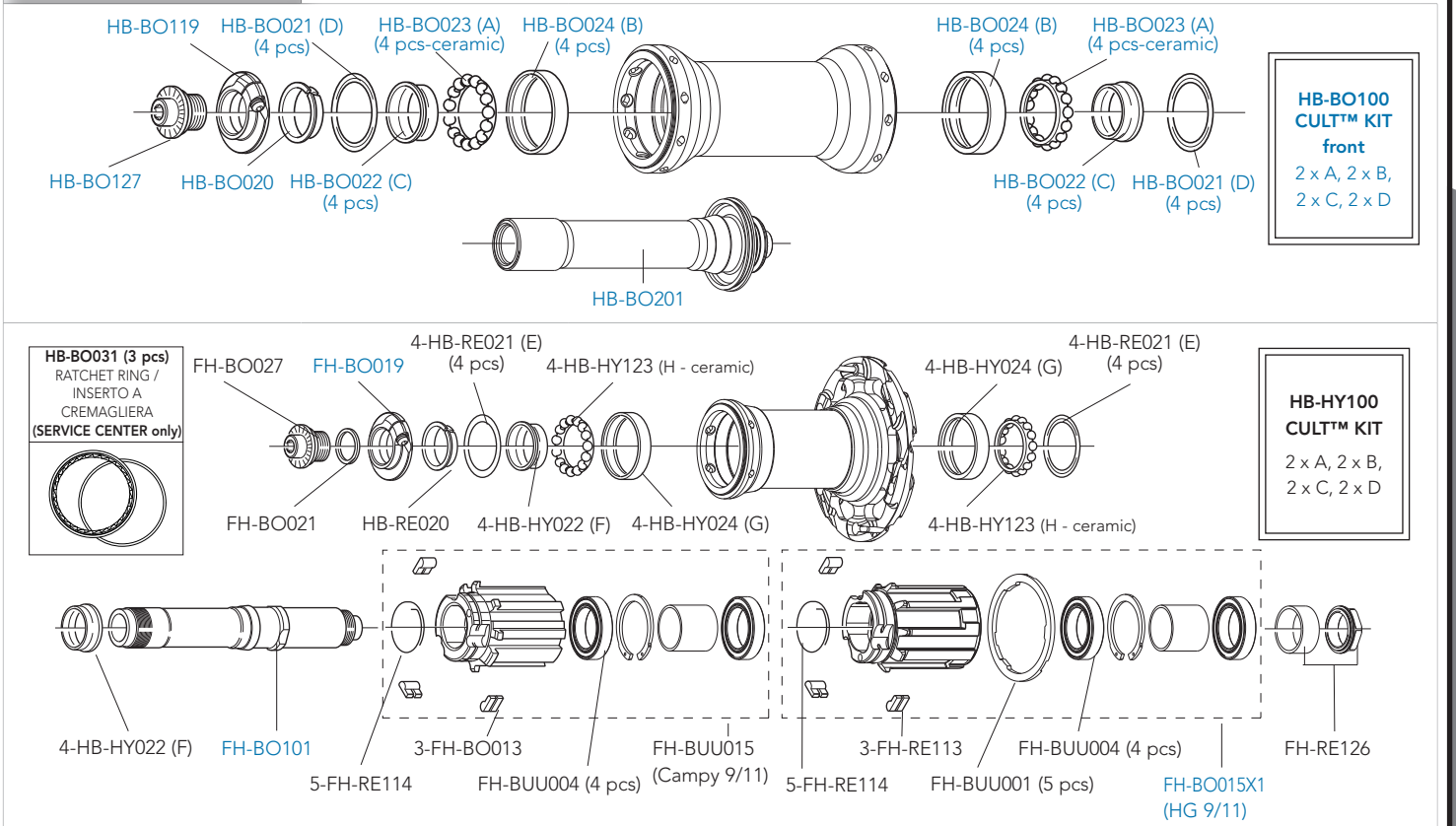

QUICK-RELEASES	QR11-20FRB	front + rear

BORA ULTRA 35

TUBULAR

RIM

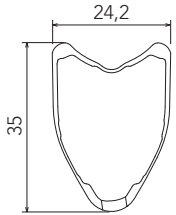

FRONT RIM	WH-101BO35 (bright) - WH-101BO35DK (dark)
REAR RIM	WH-102BO35 (bright) - WH-102BO35DK (dark)
VALVE HOLE	6,5 mm
VALVE HOLE BUSHING	WH-BUU002 (5 pcs.)
DIAMETER	634 mm
BRAKE SHOES	for carbon rims - BR-BO500 (for brakes with retention spring or interference fixing) - BR-BO500X (for brakes with screw fixing)

SPOKES

FRONT / REAR RH SPOKE	WH-019BOT35	4 spokes + 4 nipples
REAR LH SPOKE	WH-018BOT35	4 spokes + 4 nipples
NIPPLES	WH-015BO80	black - 10 pieces
NIPPLE INSERT	UT-WH160	magnet-attractor for nipple
NIPPLE MAGNET	UT-WH050	nipple-guide
SPOKE SPANNER	UT-WH090	spoke wrenches

ACCESSORIES

Spacer for HG11 FW body	FH-BUU001	5 pcs - to be used only with 9/10s sprockets *(please note that every HG11 rear wheel/HG11 FW body package contains the spacer)*

⚠ WARNING!

Because of the high temperatures reached when breaking, we recommend you use only glue for tubular tires specifically for carbon fibre rims.
A causa delle alte temperature raggiunte in frenata, vi consigliamo di utilizzare solamente colla per tubolari che sia specifica per i soli cerchi in fibra di carbonio.

HUBS

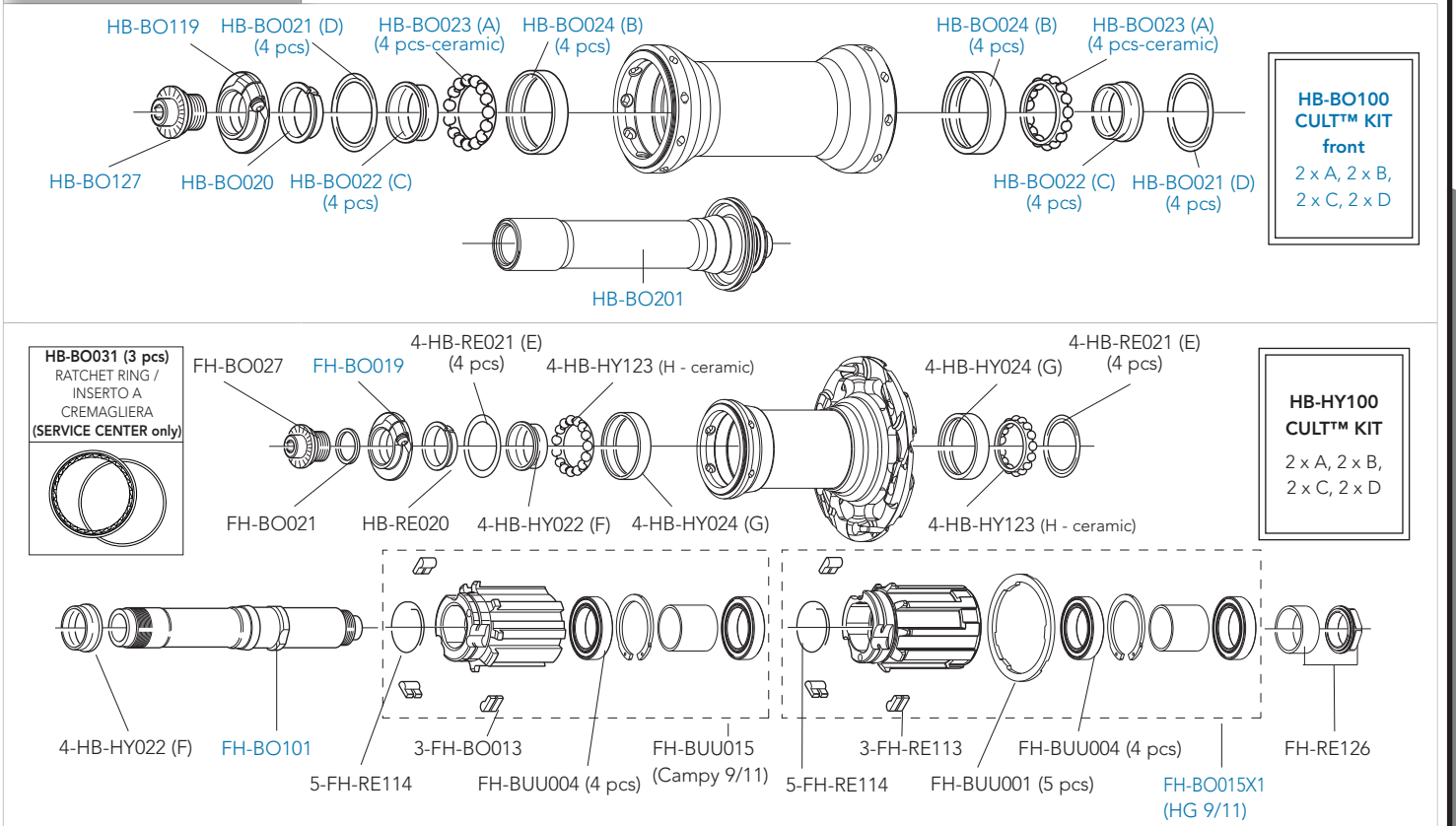

QUICK-RELEASES	QR11-20FRB	front + rear

BORA ULTRA 50

CLINCHER

RIM

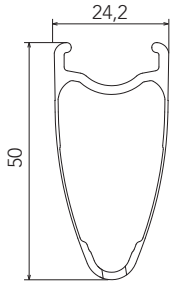

FRONT RIM	WH-003BO50 (bright) / WH-003BO50DK (dark)	
REAR RIM	WH-004BO50 (bright) / WH-004BO50DK (dark)	
VALVE HOLE	6,5 mm	
VALVE HOLE BUSHING	WH-BUU002 (5 pcs.)	
VALVE EXTENSION	UT-HU150	
DIAMETER	700C (622 x 17C)	
BRAKE SHOES	for carbon rims - BR-BO500 (for brakes with retention spring or interference fixing) - BR-BO500X (for brakes with screw fixing)	

SPOKES

FRONT / REAR RH SPOKE	WH-016BOT50	4 spokes + 4 nipples
REAR LH SPOKE	WH-019BOT50	4 spokes + 4 nipples
NIPPLES	WH-015BO80	black - 10 pieces
NIPPLE INSERT	UT-WH160	magnet-attractor for nipple
NIPPLE MAGNET	UT-WH050	nipple-guide
SPOKE SPANNER	UT-WH090	spoke wrenches

ACCESSORIES

Spacer for HG11 FW body	FH-BUU001	5 pcs - to be used only with 9/10s sprockets *(please note that every HG11 rear wheel/HG11 FW body package contains the spacer)*

⚠ WARNING!

Because of the high temperatures reached when breaking, we recommend you use only glue for tubular tires specifically for carbon fibre rims.
A causa delle alte temperature raggiunte in frenata, vi consigliamo di utilizzare solamente colla per tubolari che sia specifica per i soli cerchi in fibra di carbonio.

HUBS

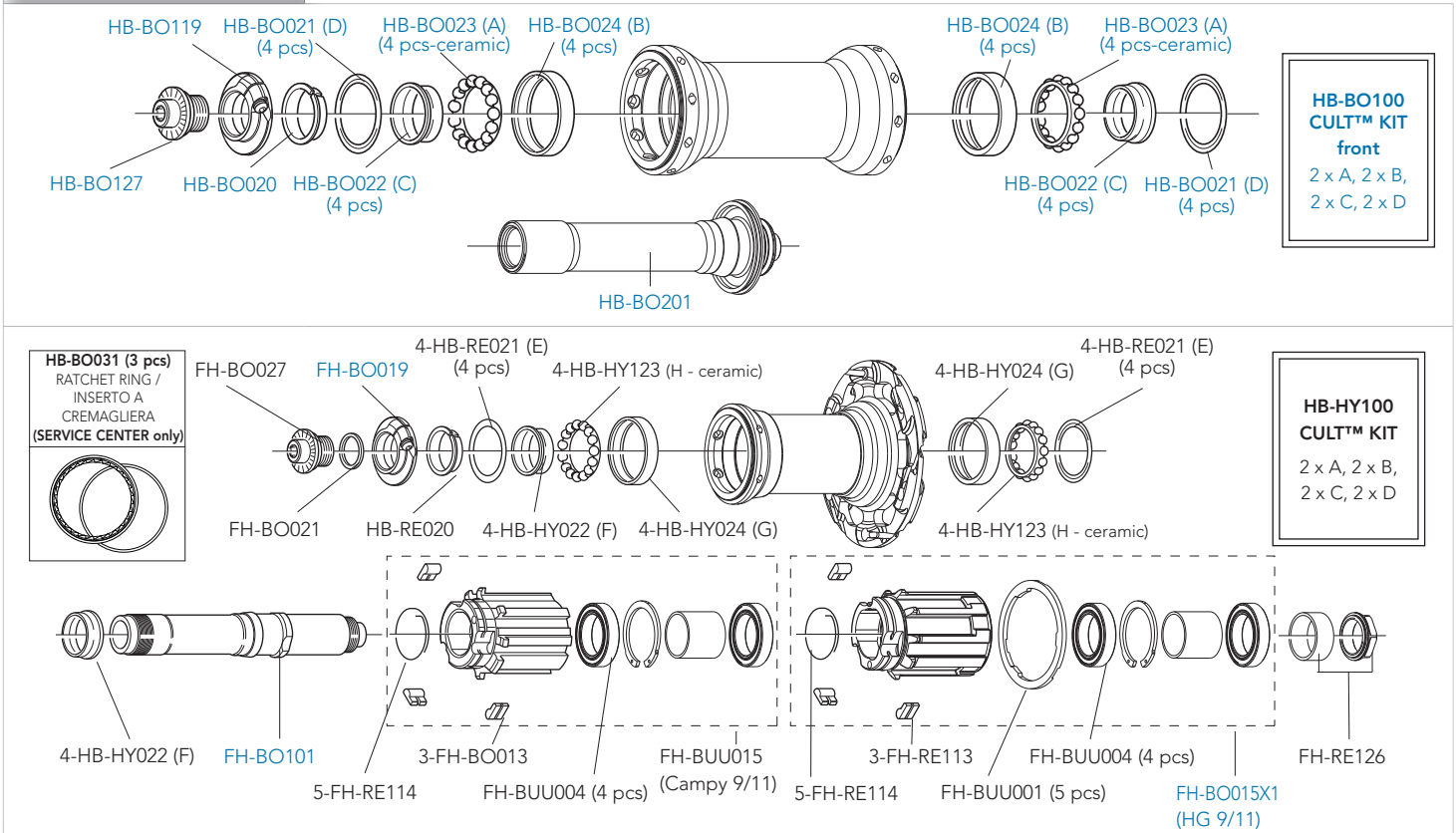

QUICK-RELEASES	QR11-20FRB	front + rear

BORA ULTRA 35

CLINCHER

RIM

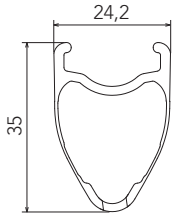

	FRONT RIM	WH-003BO35 (bright) - WH-003BO35DK (dark)
	REAR RIM	WH-004BO35 (bright) - WH-004BO35DK (dark)
	VALVE HOLE	6,5 mm
	VALVE HOLE BUSHING	WH-BUU002 (5 pcs.)
	DIAMETER	700C (622 x 17C)
	BRAKE SHOES	for carbon rims - BR-BO500 (for brakes with retention spring or interference fixing) - BR-BO500X (for brakes with screw fixing)

SPOKES

FRONT / REAR RH SPOKE	WH-019BOT35	4 spokes + 4 nipples
REAR LH SPOKE	WH-018BOT35	4 spokes + 4 nipples
NIPPLES	WH-015BO80	black - 10 pieces
NIPPLE INSERT	UT-WH160	magnet-attractor for nipple
NIPPLE MAGNET	UT-WH050	nipple-guide
SPOKE SPANNER	UT-WH090	spoke wrenches

ACCESSORIES

Spacer for HG11 FW body	FH-BUU001	5 pcs - to be used only with 9/10s sprockets *(please note that every HG11 rear wheel/HG11 FW body package contains the spacer)*

⚠ WARNING!

Because of the high temperatures reached when breaking, we recommend you use only glue for tubular tires specifically for carbon fibre rims.
A causa delle alte temperature raggiunte in frenata, vi consigliamo di utilizzare solamente colla per tubolari che sia specifica per i soli cerchi in fibra di carbonio.

HUBS

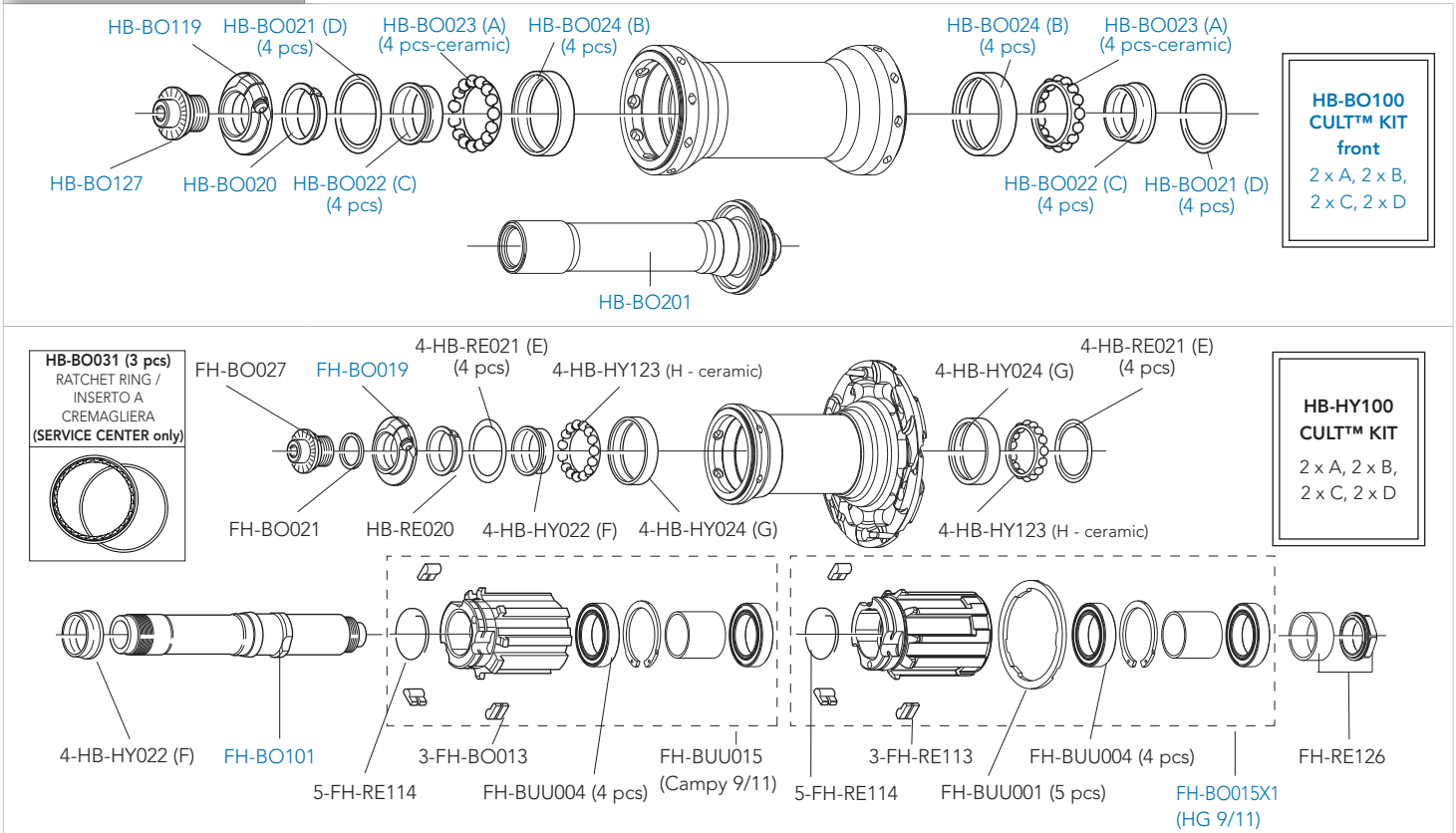

QUICK-RELEASES	QR11-20FRB	front + rear

BORA ONE 50

TUBULAR

RIM

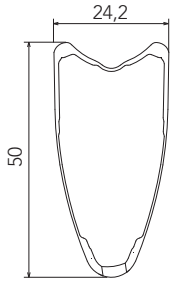

VALVE HOLE	6,5 mm
VALVE EXTENSION	UT-HU150
VALVE HOLE BUSHING	WH-BUU002
DIAMETER	634 mm
BRAKE SHOES	for carbon rims - BR-BO500 (for brakes with retention spring or interference fixing) - BR-BO500X (for brakes with screw fixing)

SPOKES

FRONT / REAR RH SPOKE	WH-016BOT50	4 spokes + 4 nipples
REAR LH SPOKE	WH-019BOT50	4 spokes + 4 nipples
NIPPLES	WH-015BO80	black - 10 pieces
NIPPLE INSERT	UT-WH160	magnet-attractor for nipple
NIPPLE MAGNET	UT-WH050	nipple-guide
SPOKE SPANNER	UT-WH090	spoke wrenches

ACCESSORIES

Spacer for HG11 FW body	FH-BUU001	5 pcs - to be used only with 9/10s sprockets *(please note that every HG11 rear wheel/HG11 FW body package contains the spacer)*

⚠ WARNING!

Because of the high temperatures reached when breaking, we recommend you use only glue for tubular tires specifically for carbon fibre rims.
A causa delle alte temperature raggiunte in frenata, vi consigliamo di utilizzare solamente colla per tubolari che sia specifica per i soli cerchi in fibra di carbonio.

HUBS

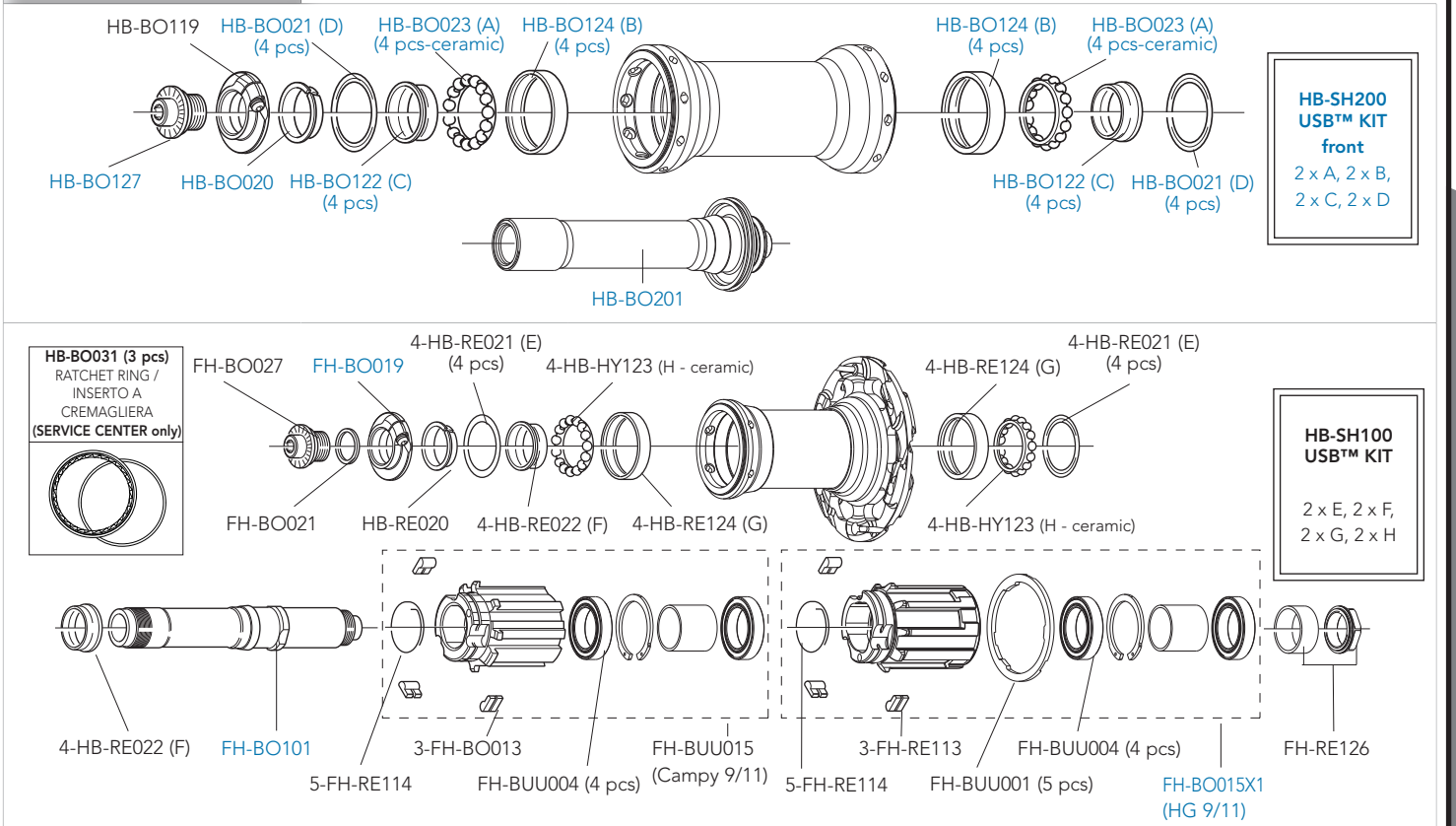

QUICK-RELEASES	QR11-20FRB	front + rear

BORA ONE 35

TUBULAR

RIM

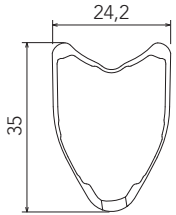

VALVE HOLE	6,5 mm
VALVE HOLE BUSHING	WH-BUU002
DIAMETER	634 mm
BRAKE SHOES	for carbon rims - BR-BO500 (for brakes with retention spring or interference fixing) - BR-BO500X (for brakes with screw fixing)

SPOKES

FRONT / REAR RH SPOKE	WH-019BOT35	4 spokes + 4 nipples
REAR LH SPOKE	WH-018BOT35	4 spokes + 4 nipples
NIPPLES	WH-015BO80	black - 10 pieces
NIPPLE INSERT	UT-WH160	magnet-attractor for nipple
NIPPLE MAGNET	UT-WH050	nipple-guide
SPOKE SPANNER	UT-WH090	spoke wrenches

ACCESSORIES

Spacer for HG11 FW body	FH-BUU001	5 pcs - to be used only with 9/10s sprockets *(please note that every HG11 rear wheel/HG11 FW body package contains the spacer)*

⚠ WARNING!

Because of the high temperatures reached when breaking, we recommend you use only glue for tubular tires specifically for carbon fibre rims.
A causa delle alte temperature raggiunte in frenata, vi consigliamo di utilizzare solamente colla per tubolari che sia specifica per i soli cerchi in fibra di carbonio.

HUBS

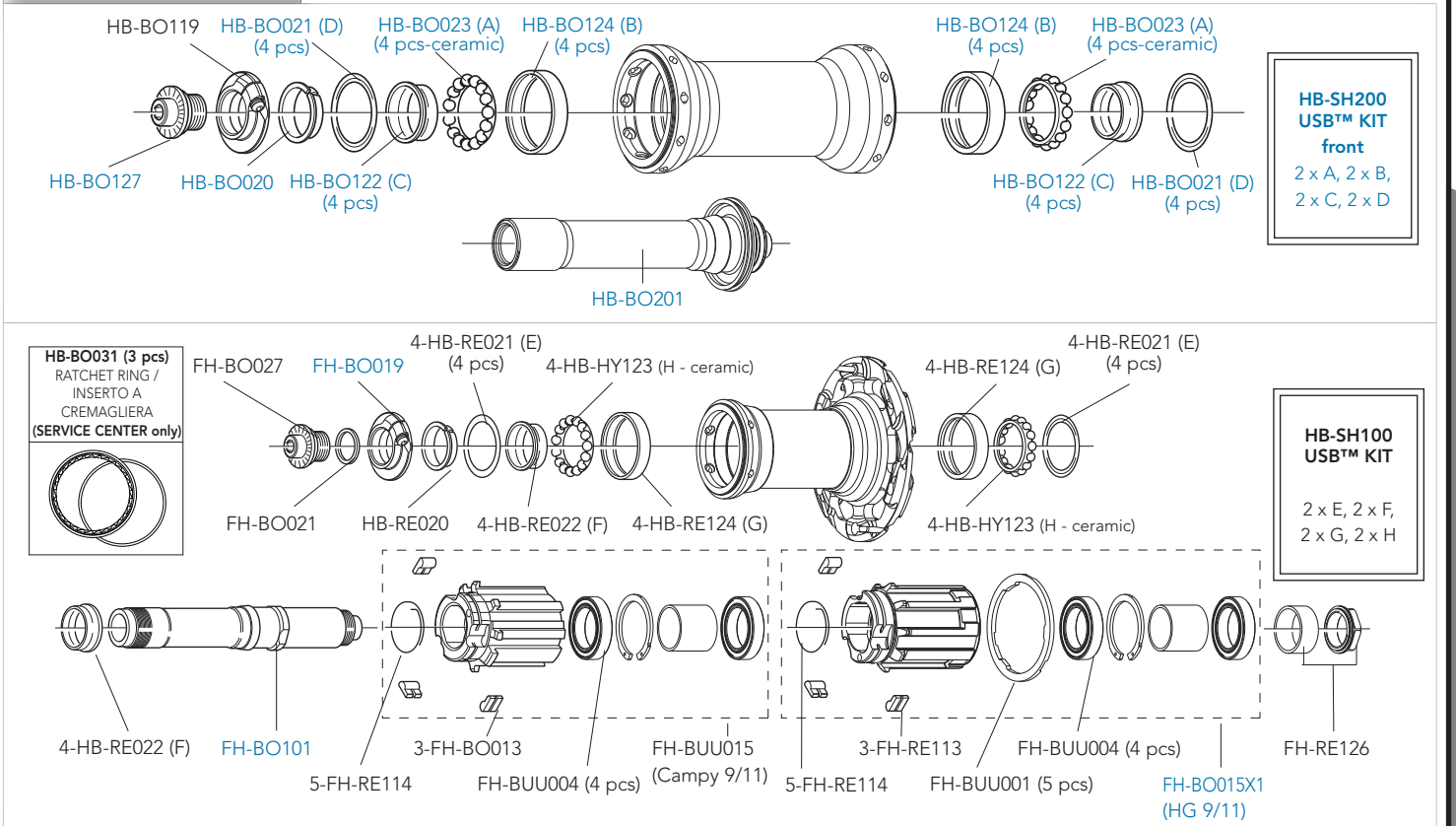

QUICK-RELEASES	QR11-20FRB	front + rear

BORA ONE 50

CLINCHER

RIM

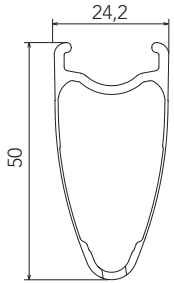

VALVE HOLE	6,5 mm
VALVE EXTENSION	UT-HU150
VALVE HOLE BUSHING	WH-BUU002
DIAMETER	700C (622 x 17C)
BRAKE SHOES	for carbon rims - BR-BO500 (for brakes with retention spring or interference fixing) - BR-BO500X (for brakes with screw fixing)

SPOKES

FRONT / REAR RH SPOKE	WH-016BOT50	4 spokes + 4 nipples
REAR LH SPOKE	WH-019BOT50	4 spokes + 4 nipples
NIPPLES	WH-015BO80	black - 10 pieces
NIPPLE INSERT	UT-WH160	magnet-attractor for nipple
NIPPLE MAGNET	UT-WH050	nipple-guide
SPOKE SPANNER	UT-WH090	spoke wrenches

ACCESSORIES

Spacer for HG11 FW body	FH-BUU001	5 pcs - to be used only with 9/10s sprockets *(please note that every HG11 rear wheel/HG11 FW body package contains the spacer)*

⚠ WARNING!

Because of the high temperatures reached when breaking, we recommend you use only glue for tubular tires specifically for carbon fibre rims.
A causa delle alte temperature raggiunte in frenata, vi consigliamo di utilizzare solamente colla per tubolari che sia specifica per i soli cerchi in fibra di carbonio.

HUBS

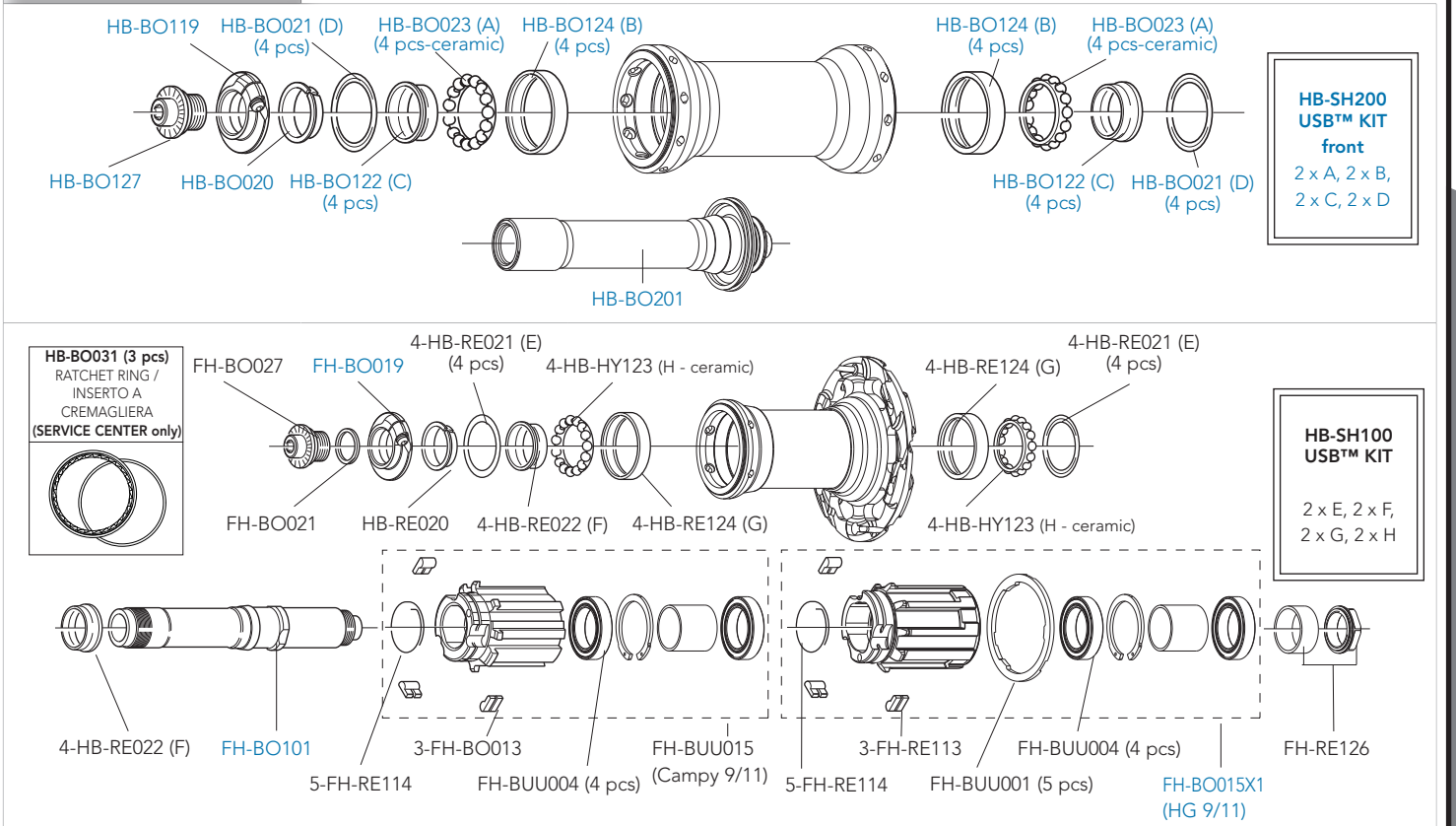

QUICK-RELEASES	QR11-20FRB	front + rear

BORA ONE 35

CLINCHER

RIM

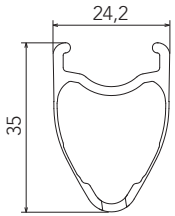

	VALVE HOLE	6,5 mm
	VALVE HOLE BUSHING	WH-BUU002
	DIAMETER	700C (622 x 17C)
	BRAKE SHOES	for carbon rims - BR-BO500 (for brakes with retention spring or interference fixing) - BR-BO500X (for brakes with screw fixing)

SPOKES

FRONT / REAR RH SPOKE	WH-019BOT35	4 spokes + 4 nipples
REAR LH SPOKE	WH-018BOT35	4 spokes + 4 nipples
NIPPLES	WH-015BO80	black - 10 pieces
NIPPLE INSERT	UT-WH160	magnet-attractor for nipple
NIPPLE MAGNET	UT-WH050	nipple-guide
SPOKE SPANNER	UT-WH090	spoke wrenches

ACCESSORIES

Spacer for HG11 FW body	FH-BUU001	5 pcs - to be used only with 9/10s sprockets *(please note that every HG11 rear wheel/HG11 FW body package contains the spacer)*

⚠ WARNING!

Because of the high temperatures reached when breaking, we recommend you use only glue for tubular tires specifically for carbon fibre rims.
A causa delle alte temperature raggiunte in frenata, vi consigliamo di utilizzare solamente colla per tubolari che sia specifica per i soli cerchi in fibra di carbonio.

HUBS

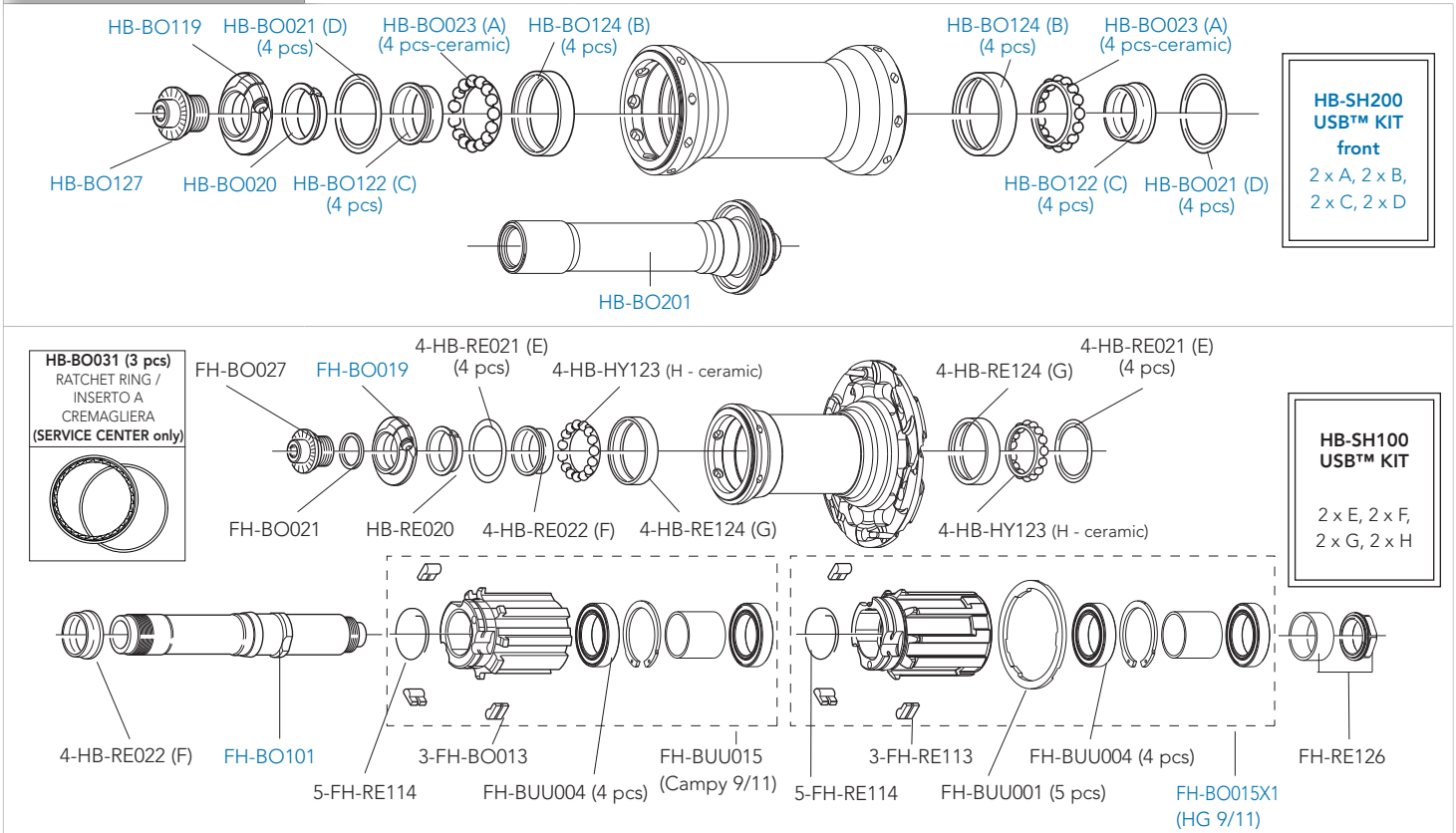

QUICK-RELEASES	QR11-20FRB	front + rear

HYPERON ULTRA TWO

TUBULAR

RIM

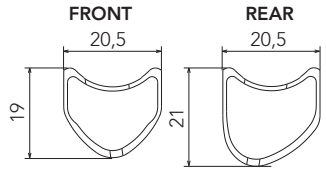

FRONT RIM	WH-201HY (with labels)
REAR RIM	WH-202HY (with labels)
LABEL KIT	LAB-HYT09 (for a pair of front+rear wheels)
VALVE HOLE	6,5 mm
DIAMETER	634 mm
BRAKE SHOES	for carbon rims - BR-BO500 (for brakes with retention spring or interference fixing) - BR-BO500X (for brakes with screw fixing)

SPOKES

COMPLETE FRONT KIT	KIT-01HY	24 front spokes + 24 nuts + 24 nut supporting plates
COMPLETE REAR KIT	KIT-02HY	13 rear right spokes + 13 rear left spokes + 26 nuts + 26 nut supporting plates + 13 barrels
MINI-KIT	KIT-100HY	2 front spokes + 2 rear right spokes + 2 rear left spokes + 6 nuts + 6 nut supporting plates + 2 barrels
NUTS	10-WH-010BO	10 pieces
NUT SUPPORTING PLATES	10-WH-011HY	10 pieces

ACCESSORIES

Spacer for HG11 FW body	FH-BUU001	5 pcs - to be used only with 9/10s sprockets *(please note that every HG11 rear wheel/HG11 FW body package contains the spacer)*

⚠ WARNING!

Because of the high temperatures reached when breaking, we recommend you use only glue for tubular tires specifically for carbon fibre rims.
A causa delle alte temperature raggiunte in frenata, vi consigliamo di utilizzare solamente colla per tubolari che sia specifica per i soli cerchi in fibra di carbonio.

HYPERON ULTRA TWO

TUBULAR

HUBS

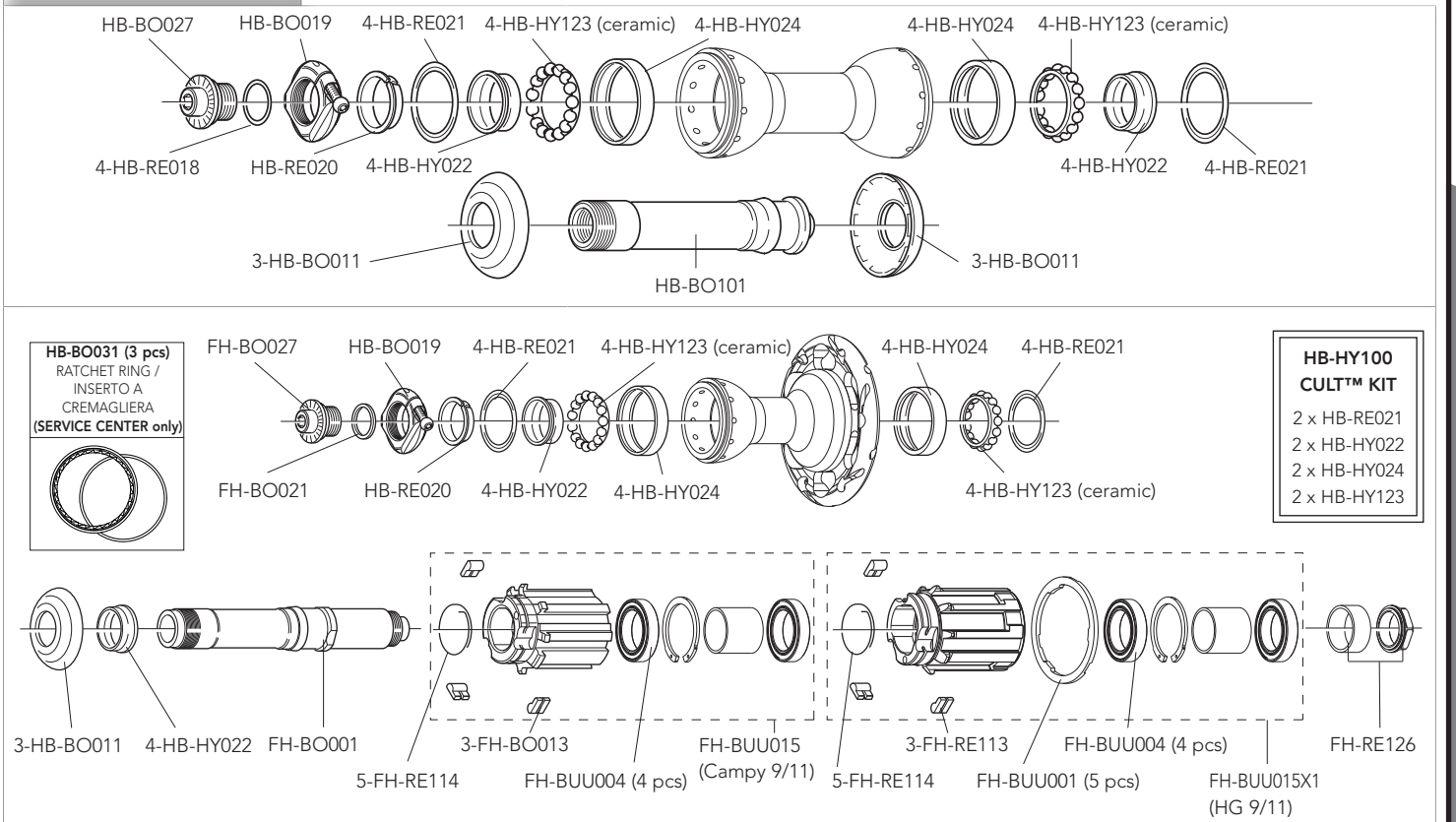

QUICK-RELEASES	QR12-BUUBFR	front + rear

HYPERON ULTRA TWO

CLINCHER

RIM

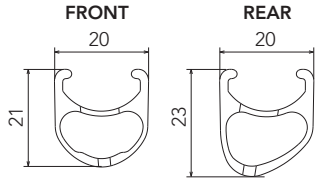

FRONT RIM	WH-203HYU (with labels)
REAR RIM	WH-104HYU (with labels)
RIM-TAPE	2-WH-RT02 (16 mm - 2 pieces)
LABEL KIT	LAB-HYUC09 (for a pair of front+rear wheels)
VALVE HOLE	6,5 mm
DIAMETER	622 X 13C
BRAKE SHOES	for carbon rims - BR-BO500 (for brakes with retention spring or interference fixing) - BR-BO500X (for brakes with screw fixing)
CLINCHER REMOVAL LEVER	WH-109HYC (6 pieces)

SPOKES

COMPLETE FRONT KIT	KIT-13HYU	22 front spokes + 22 nuts + 22 front nut supporting plates
COMPLETE REAR KIT	KIT-14HYU	12 rear right spokes + 12 rear left spokes + 24 nuts + 24 rear nut supporting plates
MINI-KIT	KIT-400HYU	2 front spokes + 2 rear right spokes + 2 rear left spokes + 6 nuts + 2 front nut supporting plates + 4 front nut supporting plates
NUTS	10-WH-010BO	10 pieces
FRONT NUT SUPPORTING PLATES	10-WH-011HY	10 pieces
REAR NUT SUPPORTING PLATES	10-WH-012HY	10 pieces

ACCESSORIES

Spacer for HG11 FW body	FH-BUU001	5 pcs - to be used only with 9/10s sprockets *(please note that every HG11 rear wheel/HG11 FW body package contains the spacer)*

HYPERON ULTRA TWO

CLINCHER

HUBS

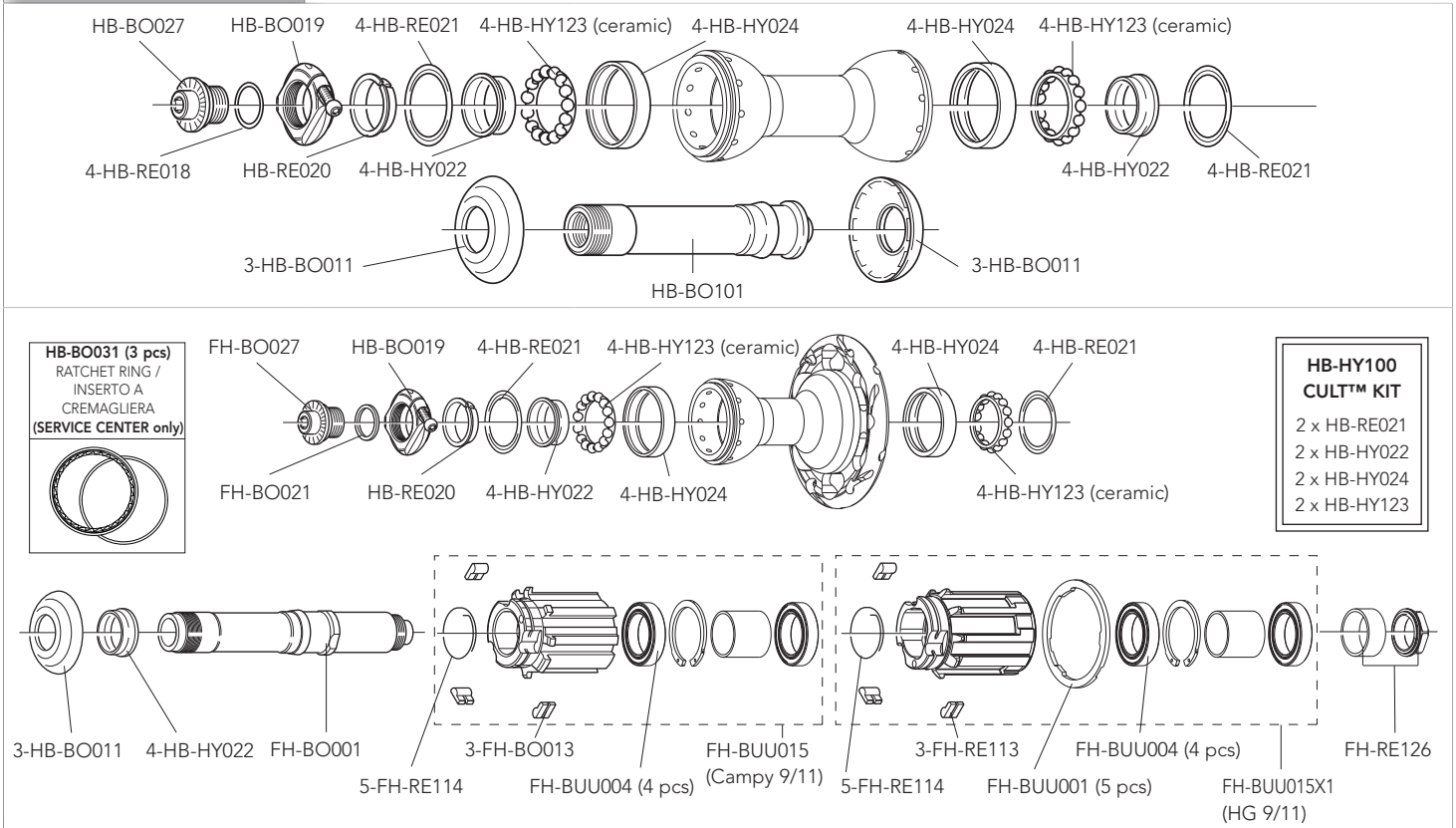

QUICK-RELEASES	QR12-BUUBFR	front + rear

BULLET ULTRA H50

CLINCHER

RIM

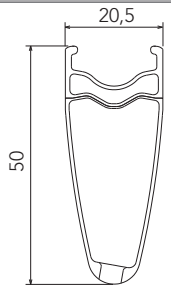

FRONT RIM	WH-003BUU **(no labels)**
REAR RIM	WH-004BUU **(no labels)**
LABEL KIT	LAB-BUU12 (front+rear) - LAB-BUU12DK (front+rear DARK)
VALVE HOLE	6,5 mm
VALVE EXTENSION	UT-WH130M (male extension) - UT-WH130F (female extension)
VALVE HOLE BUSHING	WH-BUU002 (5 pcs.)
DIAMETER	700C (622 x 15C)

SPOKES

COMPLETE FRONT KIT	KIT-03BUU	18 front spokes + 18 nipples
COMPLETE REAR KIT	KIT-04BUU	14 rear right spokes + 7 rear left spokes + 21 nipples
MINI-KIT	KIT-500BUU	2 front spokes + 2 rear right spokes + 2 rear left spokes + 6 nipples
NIPPLES	WH-015BUU	red - 10 pieces
NIPPLE INSERT	UT-WH160	magnet-attractor for nipple
NIPPLE MAGNET	UT-WH050	nipple-guide
SPOKE SPANNER	UT-WH090	spoke wrenches

ACCESSORIES

Spacer for HG11 FW body	FH-BUU001	5 pcs - to be used only with 9/10s sprockets *(please note that every HG11 rear wheel/HG11 FW body package contains the spacer)*

BULLET ULTRA H50

HUBS

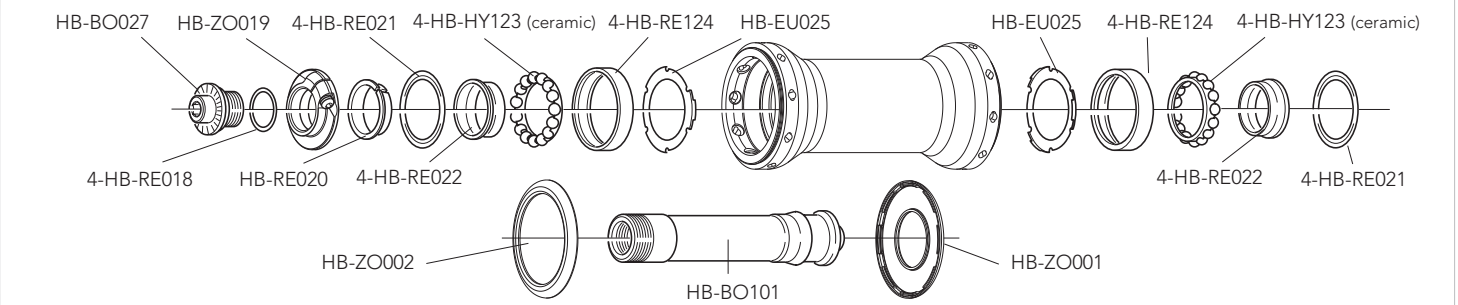

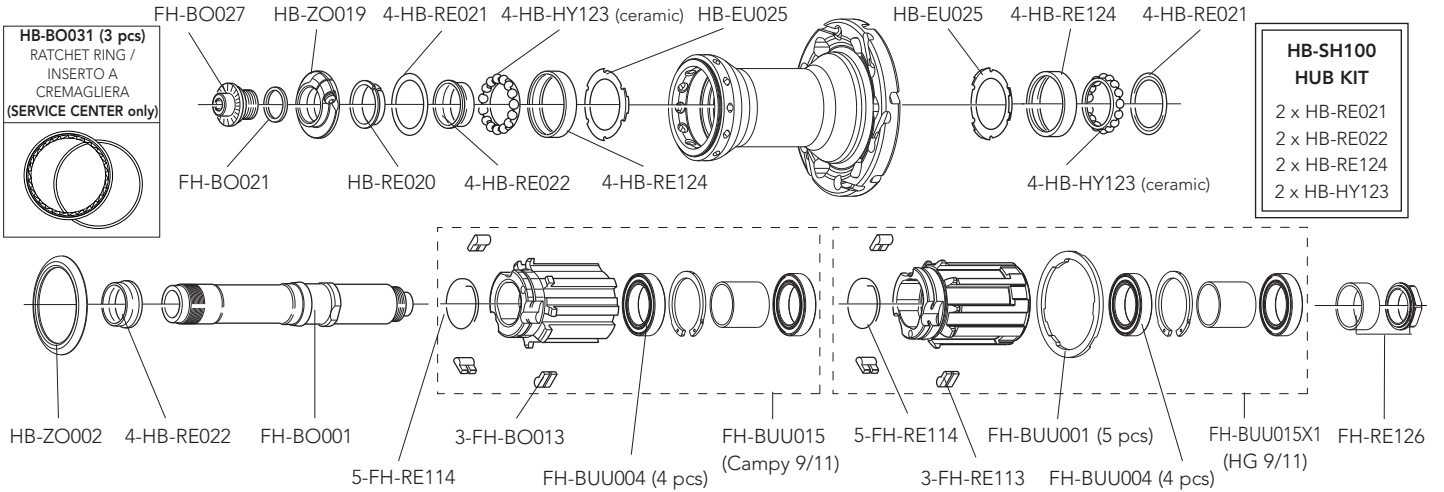

QUICK-RELEASES	QR12-BUUBFR	front + rear

BULLET ULTRA H50

CULT BEARINGS

HUBS

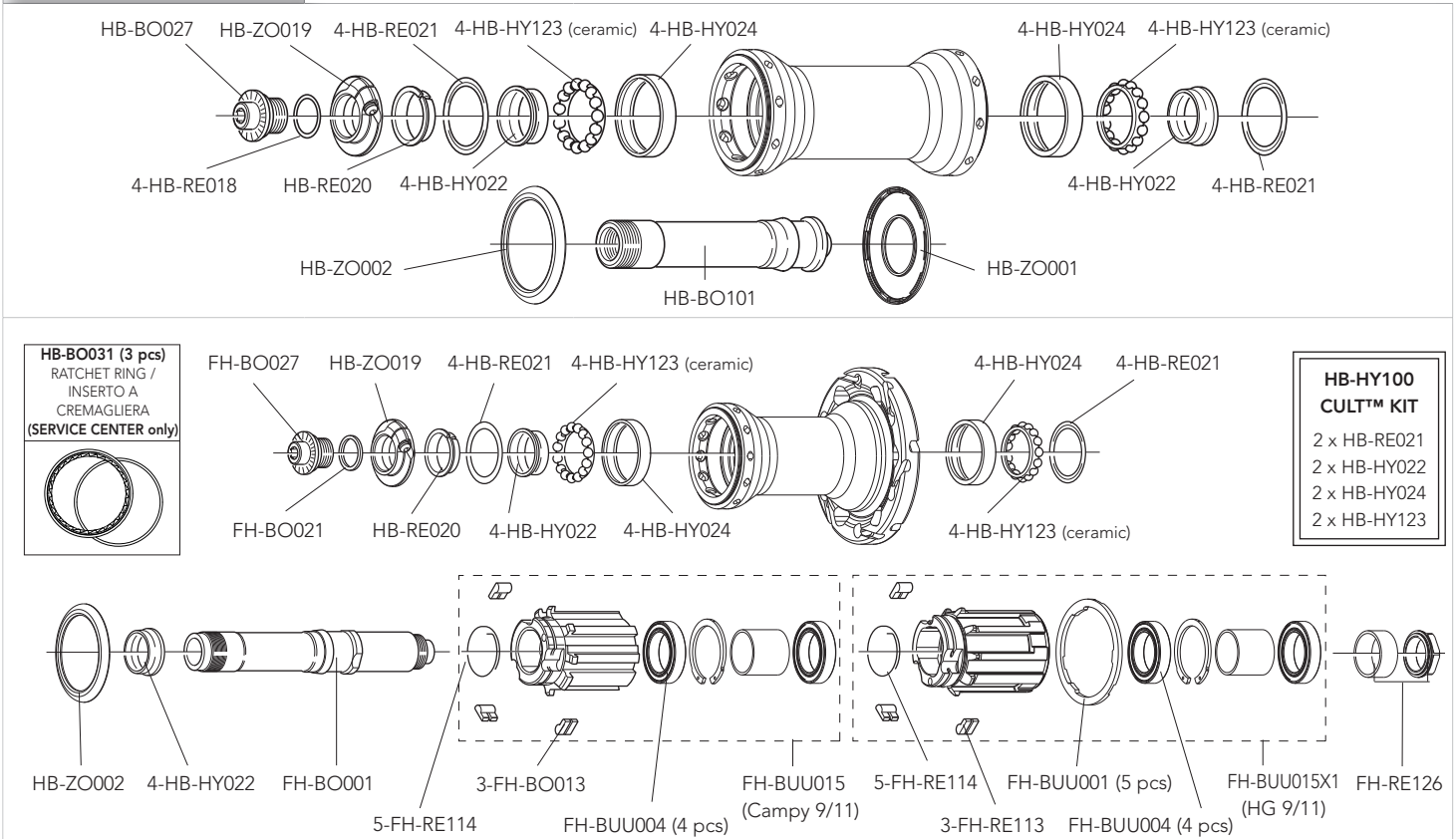

QUICK-RELEASES	QR12-BUUBFR	front + rear

BULLET ULTRA H80

CLINCHER

RIM

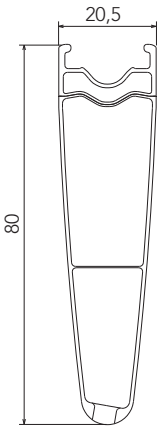

FRONT RIM	WH-003BUU80 **(no labels)**
REAR RIM	WH-004BUU80 **(no labels)**
LABEL KIT	LAB-BUU1280 (front+rear) - LAB-BUU1280DK (front+rear DARK)
VALVE HOLE	6,5 mm
VALVE EXTENSION	UT-WH140M (male extension) - UT-WH140F (female extension)
VALVE HOLE BUSHING	WH-BUU002 (5 pcs.)
DIAMETER	700C (622 x 15C)

SPOKES

COMPLETE FRONT KIT	KIT-03BUU80	16 front spokes + 16 nipples
COMPLETE REAR KIT	KIT-04BUU80	12 rear right spokes+6 rear left spokes+18 nipples
MINI-KIT	KIT-500BUU80	2 front spokes+2 rear right spokes+2 rear left spokes+6 nipples
NIPPLES	WH-015BUU	red - 10 pieces
NIPPLE INSERT	UT-WH160	magnet-attractor for nipple
NIPPLE MAGNET	UT-WH050	nipple-guide
SPOKE SPANNER	UT-WH090	spoke wrenches

ACCESSORIES

Spacer for HG11 FW body	FH-BUU001	5 pcs - to be used only with 9/10s sprockets *(please note that every HG11 rear wheel/HG11 FW body package contains the spacer)*

BULLET ULTRA H80

USB BEARINGS

HUBS

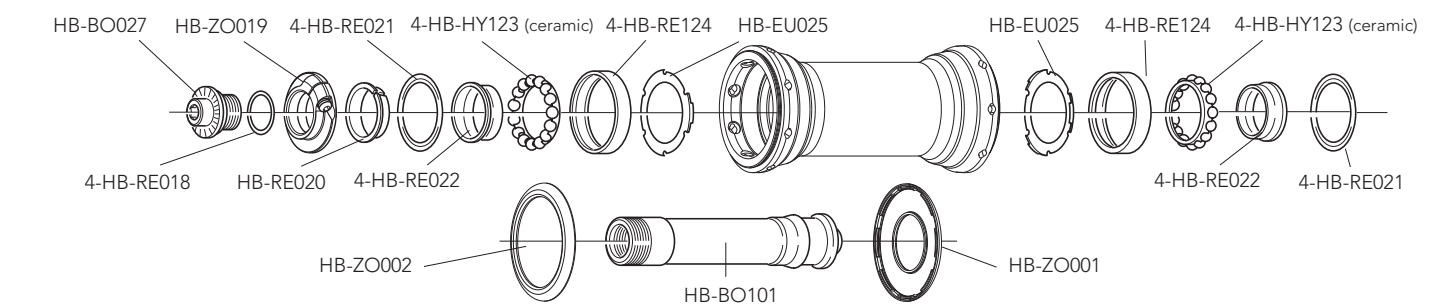

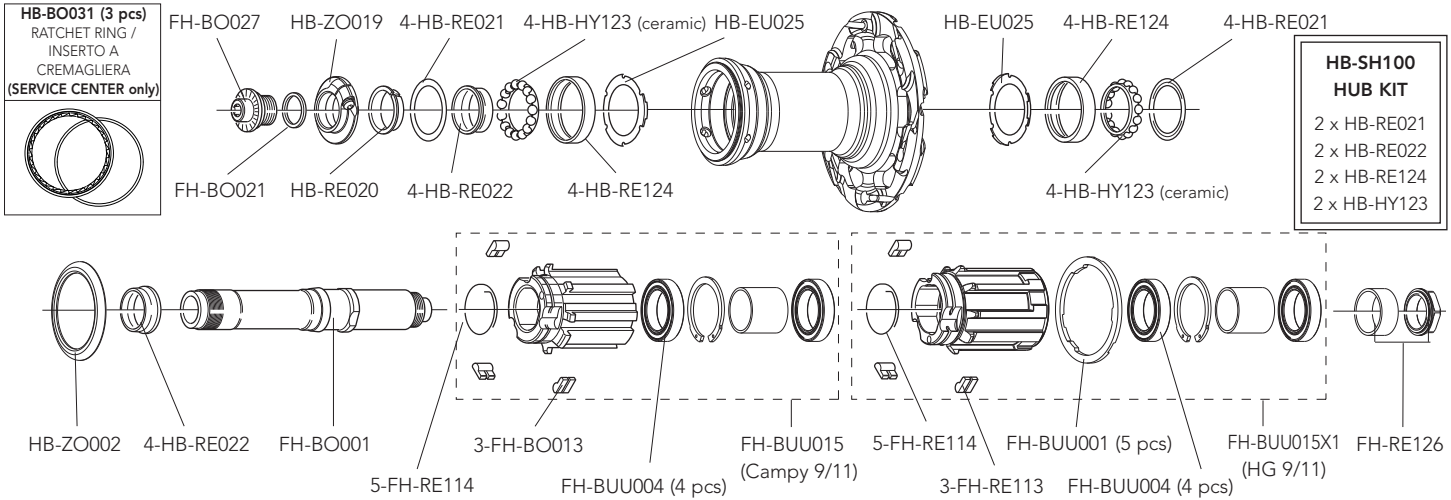

QUICK-RELEASES	QR12-BUUBFR	front + rear

BULLET ULTRA H80

HUBS

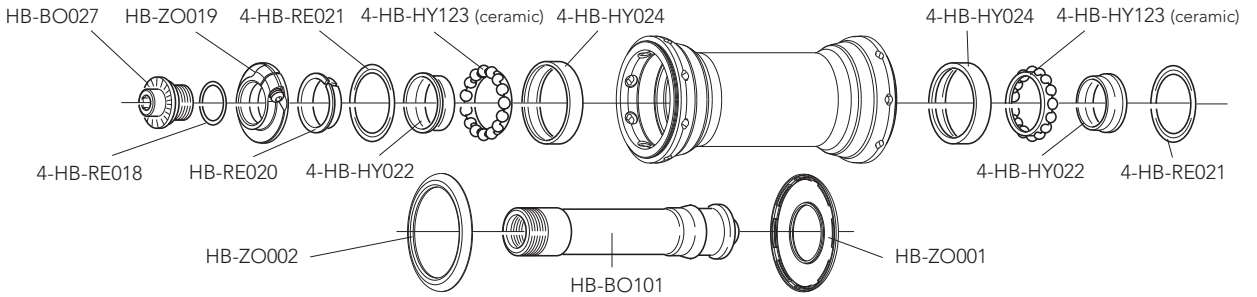

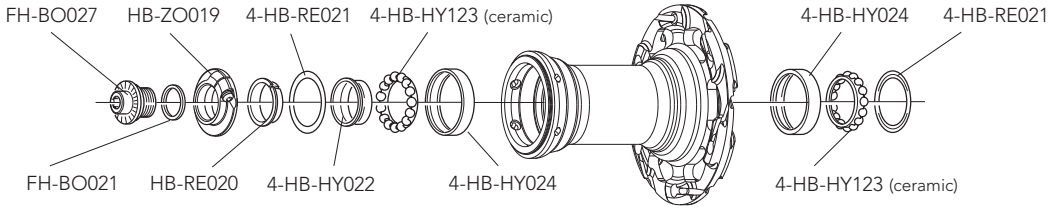

HB-HY100 CULT™ KIT

2 x HB-RE021
2 x HB-HY022
2 x HB-HY024
2 x HB-HY123

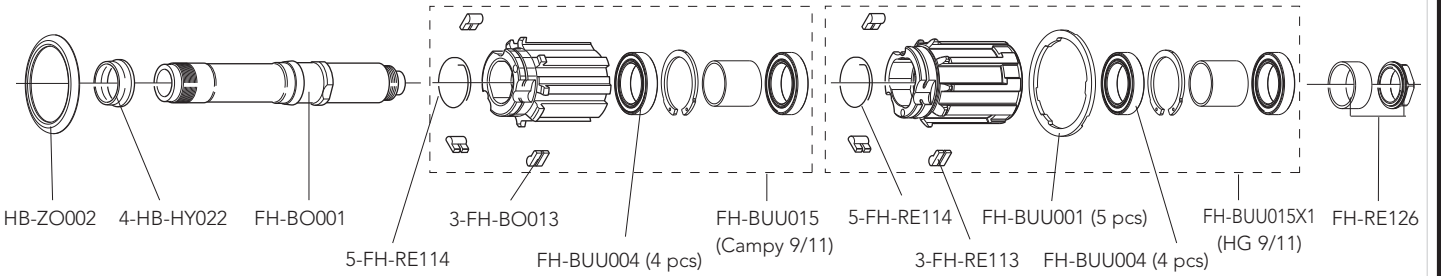

QUICK-RELEASES	QR12-BUUBFR	front + rear

BULLET H50

CLINCHER

RIM

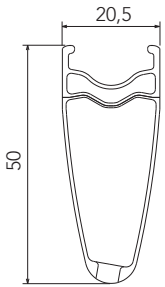

FRONT RIM	WH-003BUU **(no labels)**
REAR RIM	WH-004BUU **(no labels)**
LABEL KIT	LAB-BU12 (front+rear)
VALVE HOLE	6,5 mm
VALVE EXTENSION	UT-WH130M (male extension) - UT-WH130F (female extension)
VALVE HOLE BUSHING	WH-BUU002 (5 pcs.)
DIAMETER	700C (622 x 15C)

SPOKES

COMPLETE FRONT KIT	KIT-03BU	18 front spokes + 18 nipples
COMPLETE REAR KIT	KIT-04BU	14 right rear spokes + 7 rear left spokes + 21 nipples
MINI-KIT	KIT-500BU	2 front spokes + 2 right rear spokes + 2 rear left spokes + 6 nipples
NIPPLES	WH-015BU	10 pieces
NIPPLE INSERT	UT-WH160	magnet-attractor for nipple
NIPPLE MAGNET	UT-WH050	nipple-guide
SPOKE SPANNER	UT-WH090	spoke wrenches

ACCESSORIES

Spacer for HG11 FW body	FH-BUU001	5 pcs - to be used only with 9/10s sprockets *(please note that every HG11 rear wheel/HG11 FW body package contains the spacer)*

HUBS

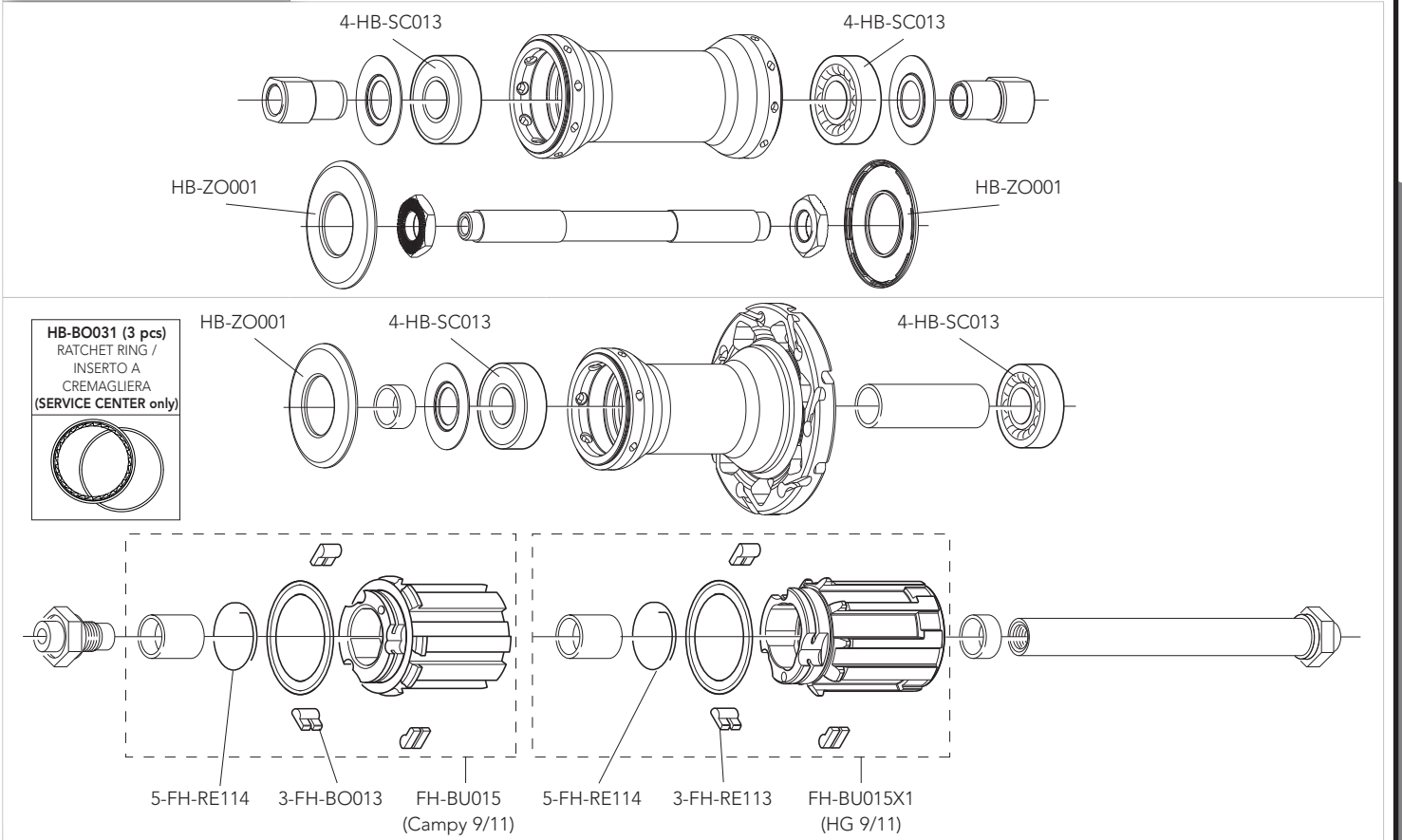

QUICK-RELEASES	QR12-ZOBFR	front + rear

BULLET H80

CLINCHER

RIM

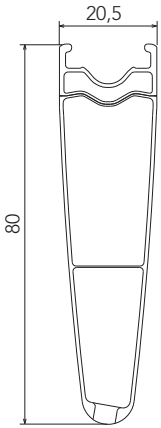

FRONT RIM	WH-003BUU80 **(no labels)**
REAR RIM	WH-004BUU80 **(no labels)**
LABEL KIT	LAB-BU1280 (front+rear)
VALVE HOLE	6,5 mm
VALVE EXTENSION	UT-WH140M (male extension) - UT-WH140F (female extension)
VALVE HOLE BUSHING	WH-BUU002 (5 pcs.)
DIAMETER	700C (622 x 15C)

SPOKES

COMPLETE FRONT KIT	KIT-03BU80	16 front spokes + 16 nipples
COMPLETE REAR KIT	KIT-04BU80	12 rear right spokes + 6 rear left spokes + 18 nipples
MINI-KIT	KIT-500BU80	2 front spokes + 2 rear right spokes + 2 rear left spokes + 6 nipples
NIPPLES	WH-015BU	10 pieces
NIPPLE INSERT	UT-WH160	magnet-attractor for nipple
NIPPLE MAGNET	UT-WH050	nipple-guide
SPOKE SPANNER	UT-WH090	spoke wrenches

ACCESSORIES

Spacer for HG11 FW body	FH-BUU001	5 pcs - to be used only with 9/10s sprockets *(please note that every HG11 rear wheel/HG11 FW body package contains the spacer)*

HUBS

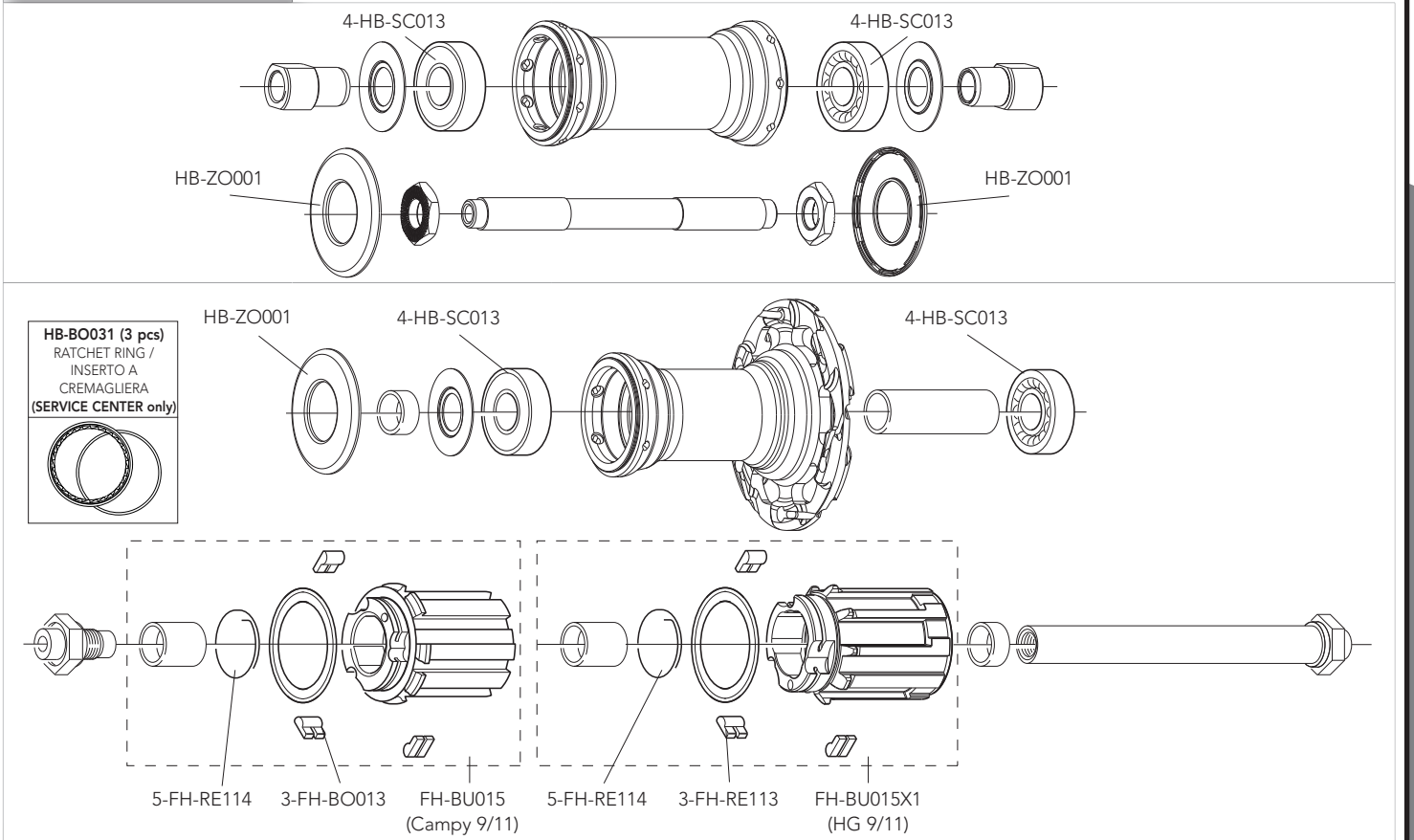

QUICK-RELEASES	QR12-ZOBFR	front + rear

SHAMAL MILLE

CLINCHER

RIM

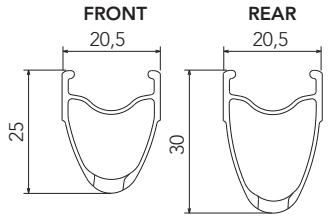

FRONT RIM	WH-003SHM (**no labels**)
REAR RIM	WH-004SHM (**no labels**)
LABEL KIT	LAB-SHMC15 (front+rear)
VALVE HOLE	6,5 mm
DIAMETER	622 X 15C
BRAKE SHOES	for rims with Plasma Electrolitic Oxydation treatment: BR-PEO500 (for brakes with retention spring fixing) - BR-PEO500X (for brakes with screw fixing)

SPOKES

FRONT KIT	KIT-03SHM	16 front/rear right spokes
REAR KIT	KIT-24SHB	14 front/rear right spokes + 7 rear left spokes
COMPLETE FRONT SPOKE	WH-005SHM	spoke + nipple
COMPLETE REAR RIGHT SPOKE	WH-105SHB	spoke + nipple
COMPLETE REAR LEFT SPOKE	WH-107SHB	spoke + nipple
NIPPLES	10-WH-015SH	10 pieces
SPOKE RING	UT-WH010	anti-rotation spokes
NIPPLE INSERT	UT-WH020	magnet-attractor for nipple
NIPPLE MAGNET	UT-WH080	nipple-guide
SPOKE SPANNER	UT-WH070	spoke wrenches

ACCESSORIES

Spacer for HG11 FW body	FH-BUU001	5 pcs - to be used only with 9/10s sprockets *(please note that every HG11 rear wheel/HG11 FW body package contains the spacer)*

HUBS

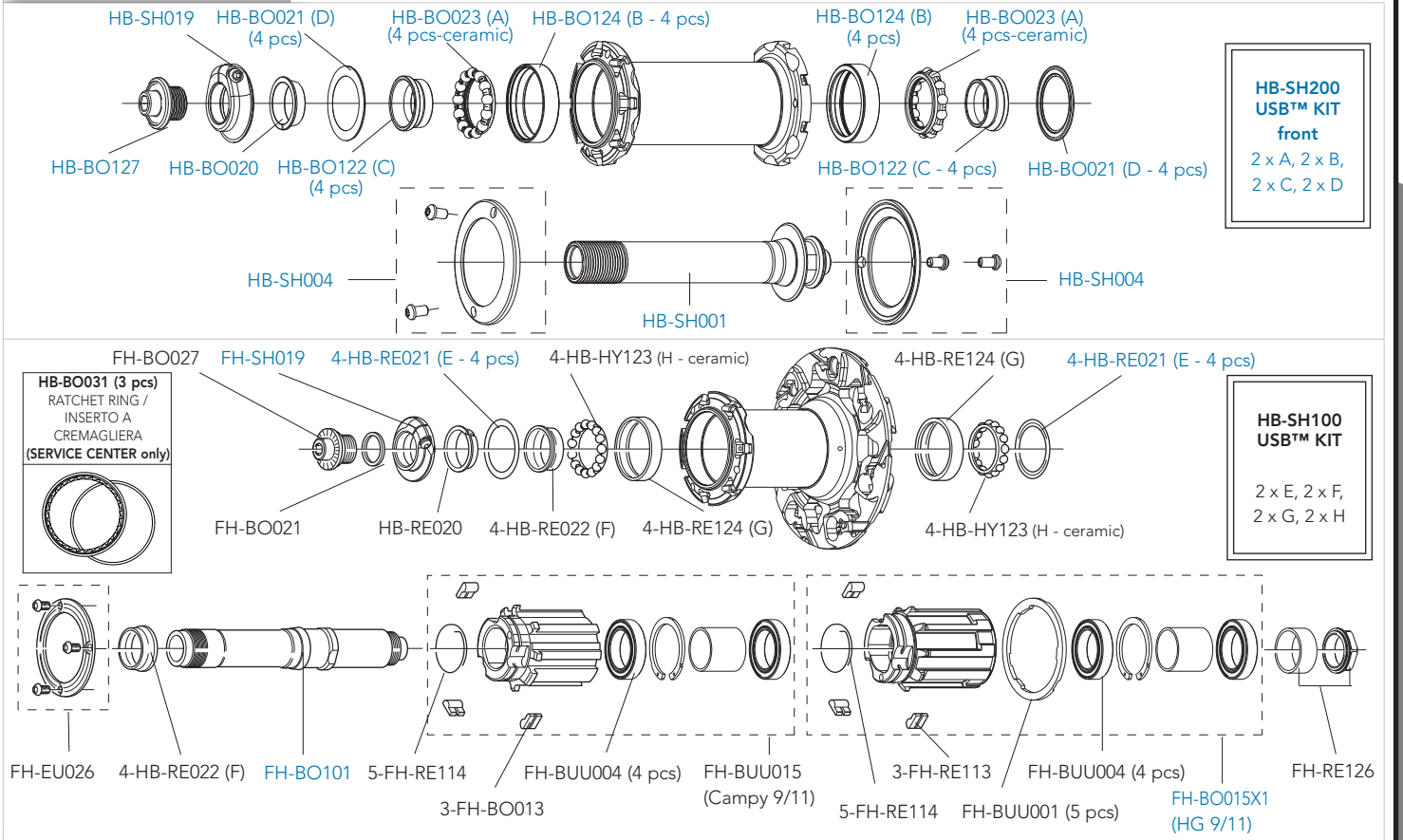

QUICK-RELEASES	QR13-80FR	front + posteriore

SHAMAL ULTRA

2-WAY FIT

RIM

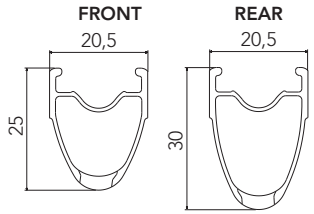

FRONT RIM	WH-213SHB (**no labels**)
REAR RIM	WH-214SHB (**no labels**)
LABEL KIT	LAB-SH2B12 (front+rear) - LAB-SH2B12DK (front+rear DARK)
VALVE HOLE	6,5 mm
2-WAY FIT™ VALVE	WH-SH001
VALVE HOLE BUSHING	5-WH-SH002 (for valve seat reduction - 5 pieces)
DIAMETER	634 mm

SPOKES

FRONT KIT	KIT-13SHB	16 front/rear right spokes
REAR KIT	KIT-24SHB	14 front/rear right spokes + 7 rear left spokes
COMPLETE FRONT/REAR RIGHT SPOKE	WH-105SHB	spoke + nipple
COMPLETE REAR LEFT SPOKE	WH-107SHB	spoke + nipple
NIPPLES	10-WH-015SH	10 pieces
SPOKE RING	UT-WH010	anti-rotation spokes
NIPPLE INSERT	UT-WH020	magnet-attractor for nipple
NIPPLE MAGNET	UT-WH080	nipple-guide
SPOKE SPANNER	UT-WH070	spoke wrenches

ACCESSORIES

Spacer for HG11 FW body	FH-BUU001	5 pcs - to be used only with 9/10s sprockets *(please note that every HG11 rear wheel/HG11 FW body package contains the spacer)*

SHAMAL ULTRA

2-WAY FIT

HUBS

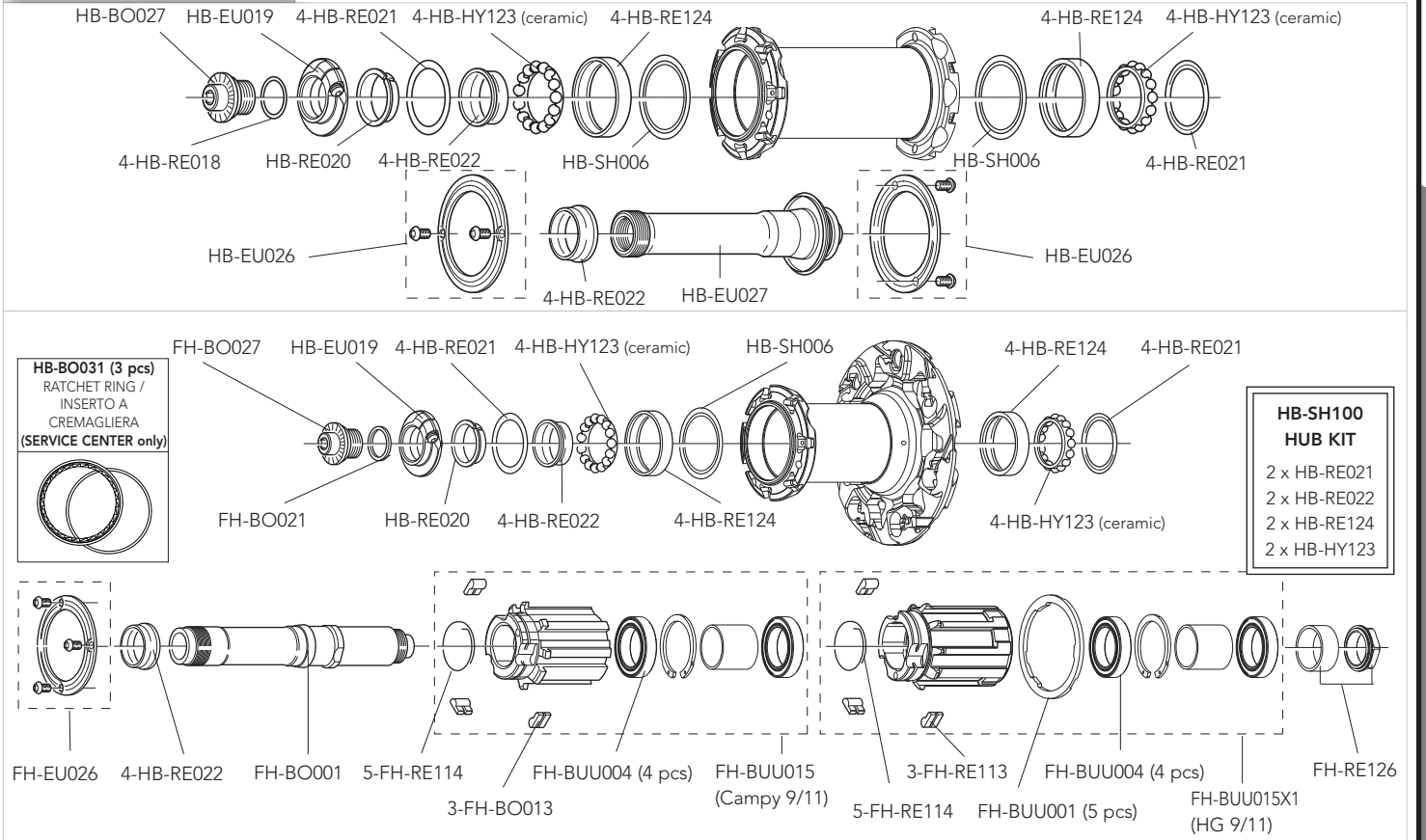

QUICK-RELEASES	QR11-20FRB	front + posteriore

SHAMAL ULTRA

CLINCHER

RIM

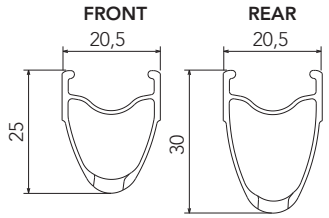

FRONT RIM	WH-303SHB (**no labels**)
REAR RIM	WH-304SHB (**no labels**)
LABEL KIT	LAB-SHCB12 (front+rear) - LAB-SHCB12DK (front+rear DARK)
VALVE HOLE	6,5 mm
DIAMETER	622 X 15C

SPOKES

FRONT KIT	KIT-13SHB	16 front/rear right spokes
REAR KIT	KIT-24SHB	14 front/rear right spokes + 7 rear left spokes
OMPLETE FRONT/REAR RIGHT SPOKE	WH-105SHB	spoke + nipple
COMPLETE REAR LEFT SPOKE	WH-107SHB	spoke + nipple
NIPPLES	10-WH-015SH	10 pieces
SPOKE RING	UT-WH010	anti-rotation spokes
NIPPLE INSERT	UT-WH020	magnet-attractor for nipple
NIPPLE MAGNET	UT-WH080	nipple-guide
SPOKE SPANNER	UT-WH070	spoke wrenches

ACCESSORIES

Spacer for HG11 FW body	FH-BUU001	5 pcs - to be used only with 9/10s sprockets *(please note that every HG11 rear wheel/HG11 FW body package contains the spacer)*

SHAMAL ULTRA

CLINCHER

HUBS

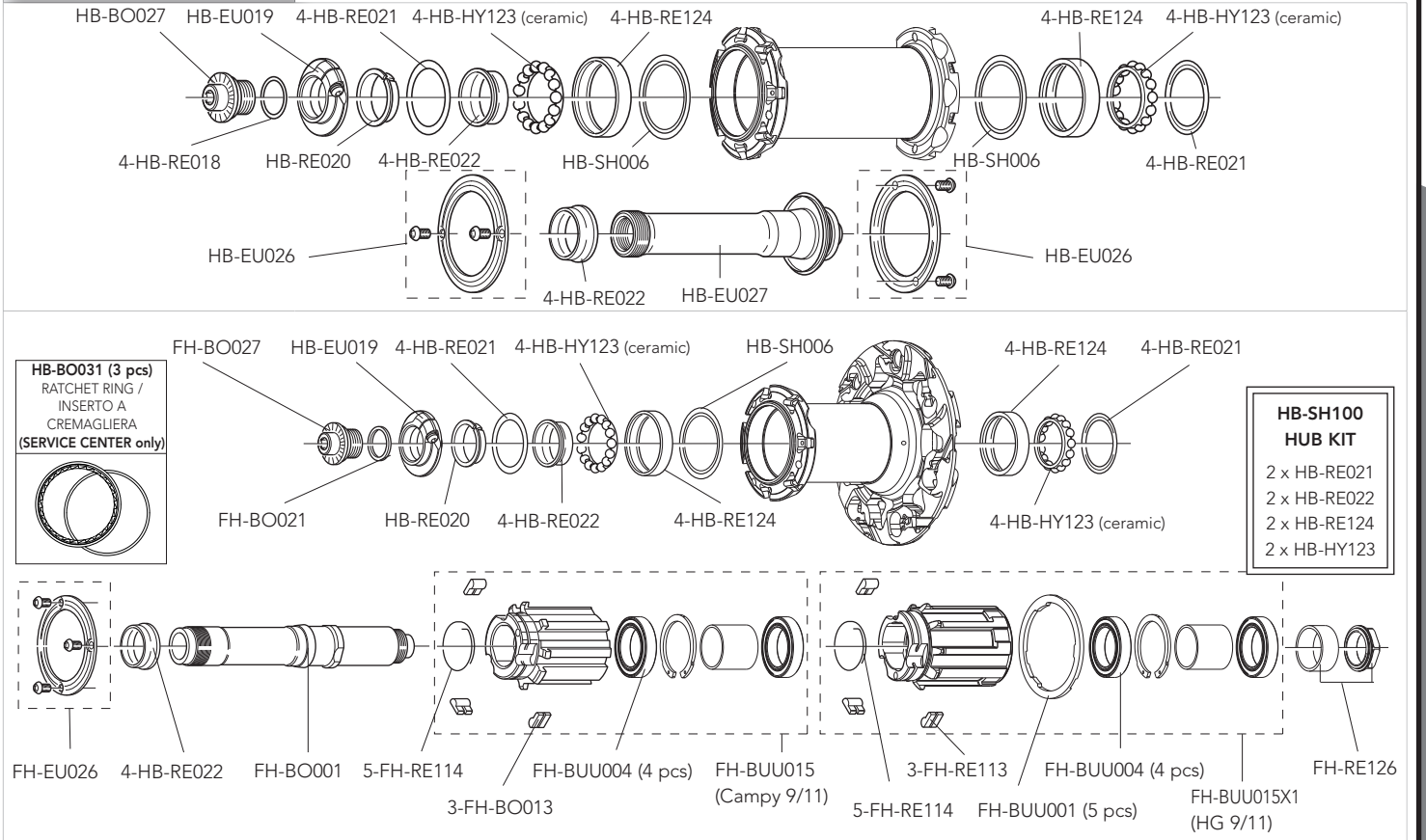

QUICK-RELEASES	QR11-20FRB	front + posteriore

SHAMAL ULTRA

TUBULAR

RIM

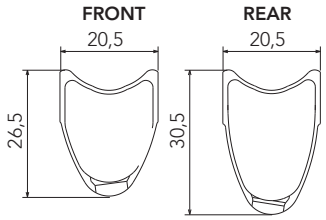

FRONT RIM	WH-301SHB (**no labels**)
REAR RIM	WH-302SHB (**no labels**)
LABEL KIT	LAB-SHTB12 (for a pair of front+rear wheels)
VALVE HOLE	6,5 mm
DIAMETER	634 mm

SPOKES

FRONT KIT	KIT-13SHB	16 front/rear right spokes
REAR KIT	KIT-24SHB	14 front/rear right spokes + 7 rear left spokes
OMPLETE FRONT/REAR RIGHT SPOKE	WH-105SHB	spoke + nipple
COMPLETE REAR LEFT SPOKE	WH-107SHB	spoke + nipple
NIPPLES	10-WH-015SH	10 pieces
SPOKE RING	UT-WH010	anti-rotation spokes
NIPPLE INSERT	UT-WH020	magnet-attractor for nipple
NIPPLE MAGNET	UT-WH080	nipple-guide
SPOKE SPANNER	UT-WH070	spoke wrenches

ACCESSORIES

Spacer for HG11 FW body	FH-BUU001	5 pcs - to be used only with 9/10s sprockets *(please note that every HG11 rear wheel/HG11 FW body package contains the spacer)*

SHAMAL ULTRA

TUBULAR

HUBS

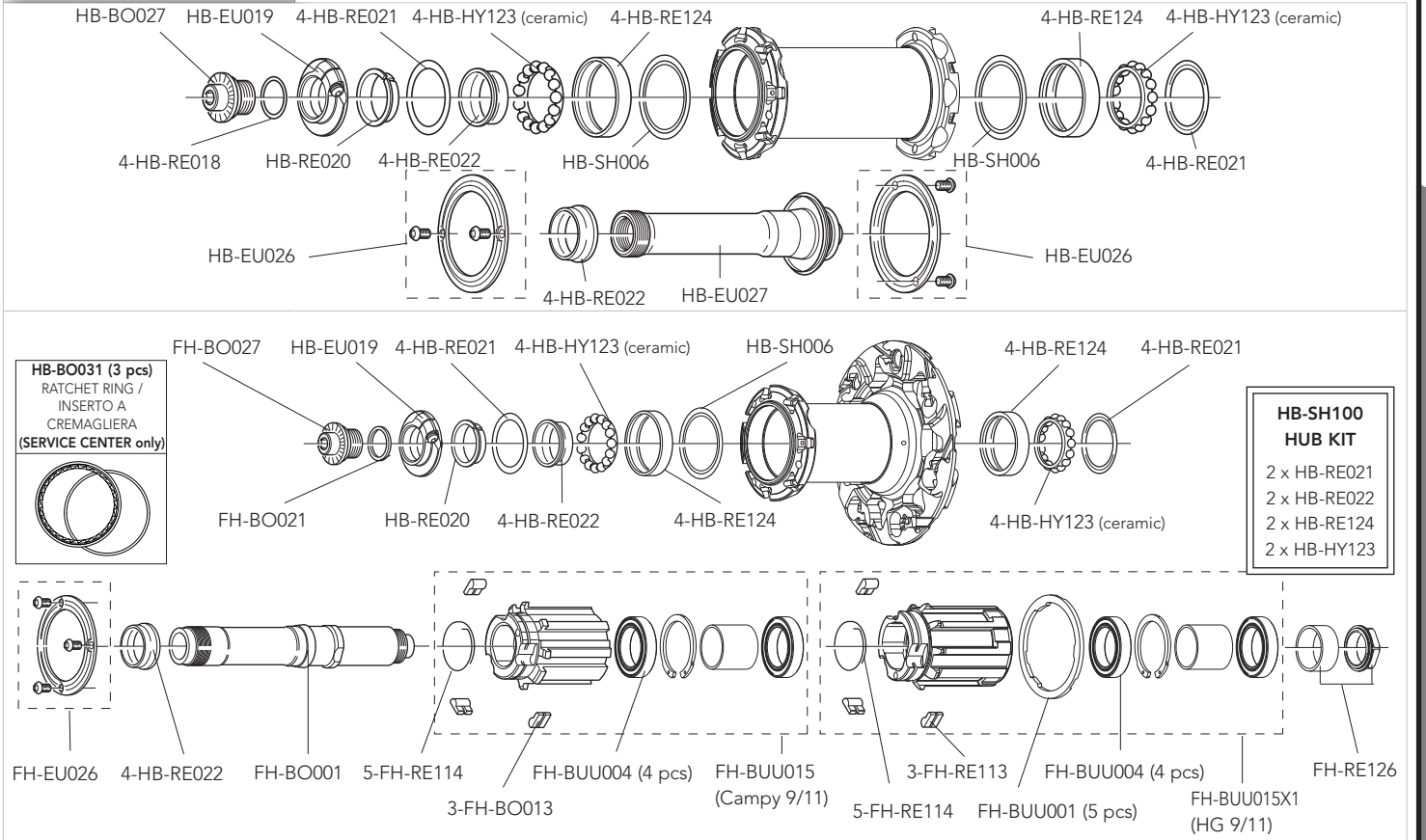

QUICK-RELEASES	QR11-20FRB	front + posteriore

EURUS

2-WAY FIT

RIM

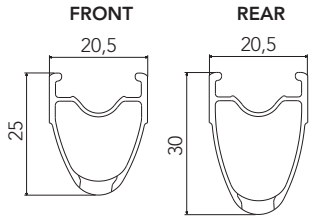

FRONT RIM	WH-213SHB (**no labels**)
REAR RIM	WH-214SHB (**no labels**)
LABEL KIT	LAB-EU2B12 (for a pair of front+rear wheels)
VALVE HOLE	6,5 mm
2-WAY FIT™ VALVE	WH-SH001
VALVE HOLE BUSHING	5-WH-SH002 (for valve seat reduction - 5 pieces)
DIAMETER	634 mm

SPOKES

FRONT KIT	KIT-13SHB	16 front/rear right spokes
REAR KIT	KIT-24SHB	14 front/rear right spokes + 7 rear left spokes
OMPLETE FRONT/REAR RIGHT SPOKE	WH-105SHB	spoke + nipple
COMPLETE REAR LEFT SPOKE	WH-107SHB	spoke + nipple
NIPPLES	10-WH-015SH	10 pieces
SPOKE RING	UT-WH010	anti-rotation spokes
NIPPLE INSERT	UT-WH020	magnet-attractor for nipple
NIPPLE MAGNET	UT-WH080	nipple-guide
SPOKE SPANNER	UT-WH070	spoke wrenches

ACCESSORIES

Spacer for HG11 FW body	FH-BUU001	5 pcs - to be used only with 9/10s sprockets *(please note that every HG11 rear wheel/HG11 FW body package contains the spacer)*

HUBS

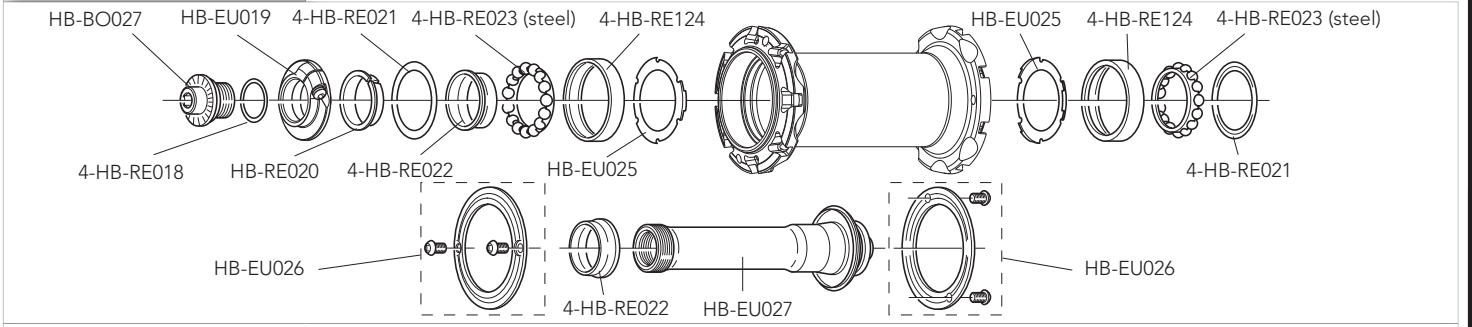

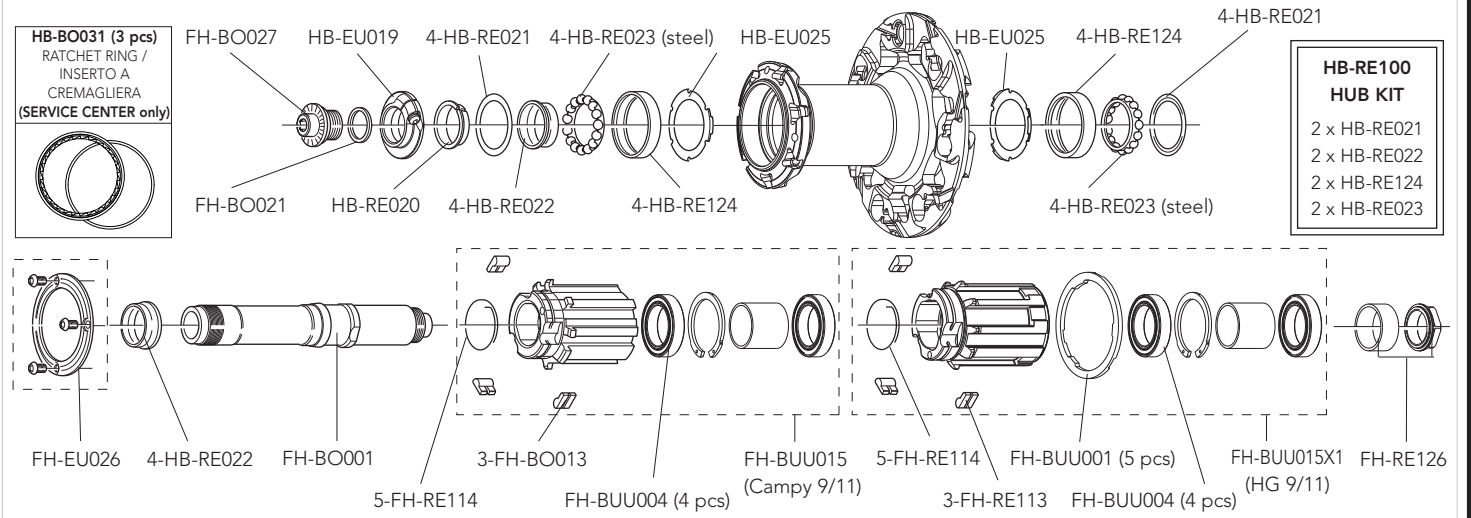

QUICK-RELEASES	QR11-20FRB	front + rear

RIM

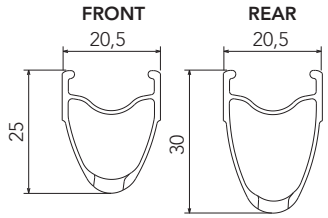

FRONT RIM	WH-303SHB (**no labels**)
REAR RIM	WH-304SHB (**no labels**)
LABEL KIT	LAB-EUCB12 (for a pair of front+rear wheels)
VALVE HOLE	6,5 mm
DIAMETER	622 X 15C

SPOKES

FRONT KIT	KIT-13SHB	16 front/rear right spokes
REAR KIT	KIT-24SHB	14 front/rear right spokes + 7 rear left spokes
OMPLETE FRONT/REAR RIGHT SPOKE	WH-105SHB	spoke + nipple
COMPLETE REAR LEFT SPOKE	WH-107SHB	spoke + nipple
NIPPLES	10-WH-015SH	10 pieces
SPOKE RING	UT-WH010	anti-rotation spokes
NIPPLE INSERT	UT-WH020	magnet-attractor for nipple
NIPPLE MAGNET	UT-WH080	nipple-guide
SPOKE SPANNER	UT-WH070	spoke wrenches

ACCESSORIES

Spacer for HG11 FW body	FH-BUU001	5 pcs - to be used only with 9/10s sprockets *(please note that every HG11 rear wheel/HG11 FW body package contains the spacer)*

HUBS

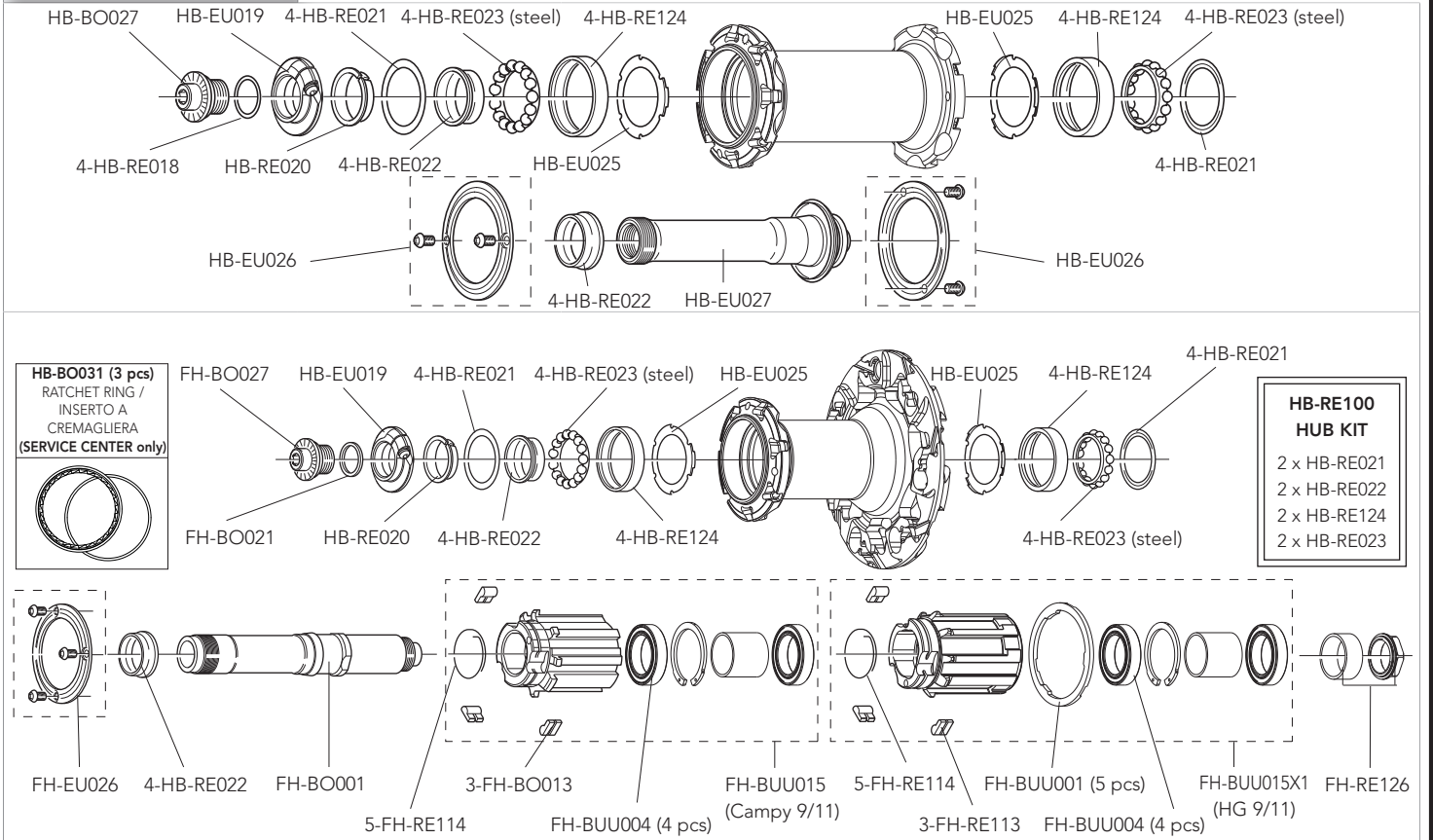

QUICK-RELEASES	QR11-20FRB	front + rear

ZONDA

2-WAY FIT

RIM

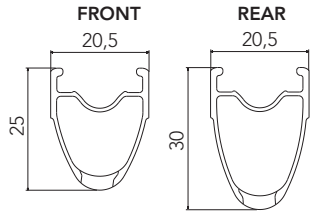

FRONT RIM	WH-113ZOB (with labels)
REAR RIM	WH-114ZOB (with labels)
LABEL KIT	LAB-ZO2B13 (for a pair of front+rear wheels)
VALVE HOLE	6,5 mm
2-WAY FIT™ VALVE	WH-SH001
DIAMETER	634 mm

SPOKES

FRONT SPOKE	WH-016ZOC	4 spokes + 4 nipples
REAR RH SPOKE	WH-018ZOC	4 spokes + 4 nipples
REAR LH SPOKE	WH-019ZOC	4 spokes + 4 nipples
NIPPLES	50-WH-015ZO	50 pieces
NIPPLE INSERT	UT-WH035	magnet-attractor for nipple
NIPPLE MAGNET	UT-WH050	nipple-guide

ACCESSORIES

Spacer for HG11 FW body	FH-BUU001	5 pcs - to be used only with 9/10s sprockets *(please note that every HG11 rear wheel/HG11 FW body package contains the spacer)*

HUBS

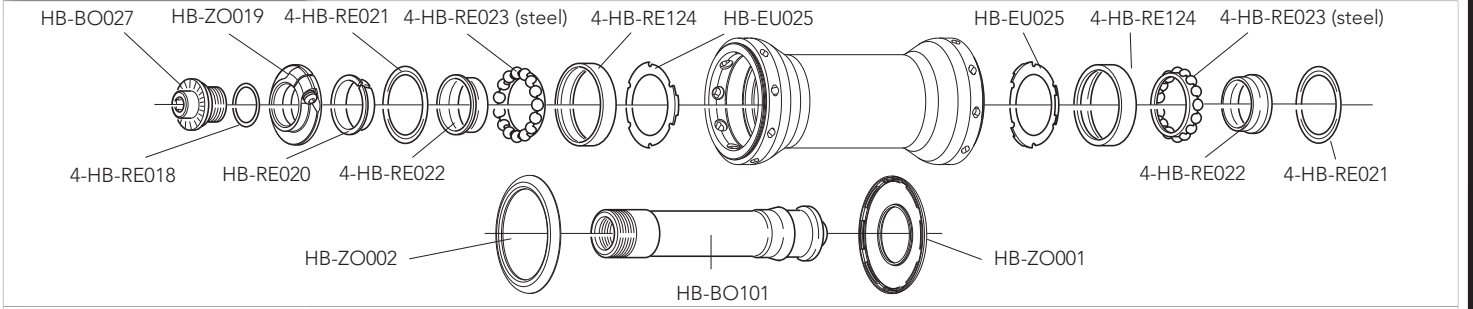

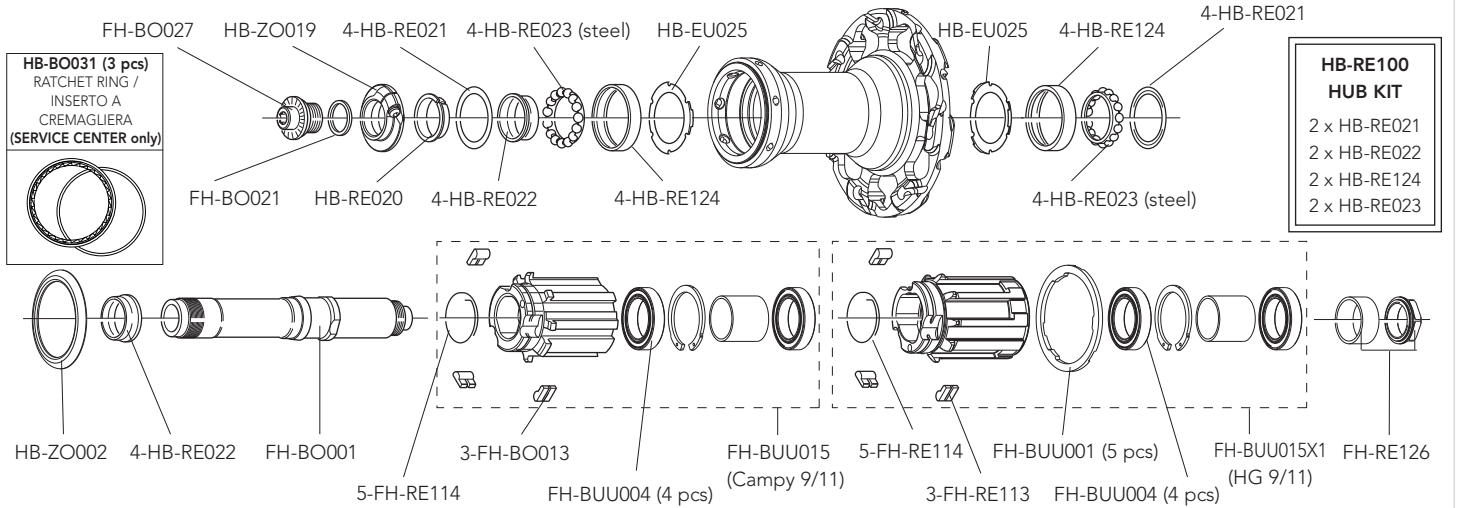

QUICK-RELEASES	QR11-20FRB	front + rear

RIM

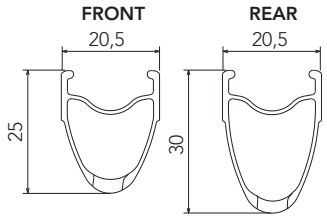

FRONT RIM	WH-303ZOB (with labels)
REAR RIM	WH-404ZOB (with labels)
LABEL KIT	LAB-ZOCB13 (for a pair of front+rear wheels)
VALVE HOLE	6,5 mm
DIAMETER	622 X 15C

SPOKES

FRONT SPOKE	WH-016ZOC	4 spokes + 4 nipples
REAR RH SPOKE	WH-018ZOC	4 spokes + 4 nipples
REAR LH SPOKE	WH-019ZOC	4 spokes + 4 nipples
NIPPLES	50-WH-015ZO	50 pieces
NIPPLE INSERT	UT-WH035	magnet-attractor for nipple
NIPPLE MAGNET	UT-WH050	nipple-guide

ACCESSORIES

Spacer for HG11 FW body	FH-BUU001	5 pcs - to be used only with 9/10s sprockets *(please note that every HG11 rear wheel/HG11 FW body package contains the spacer)*

HUBS

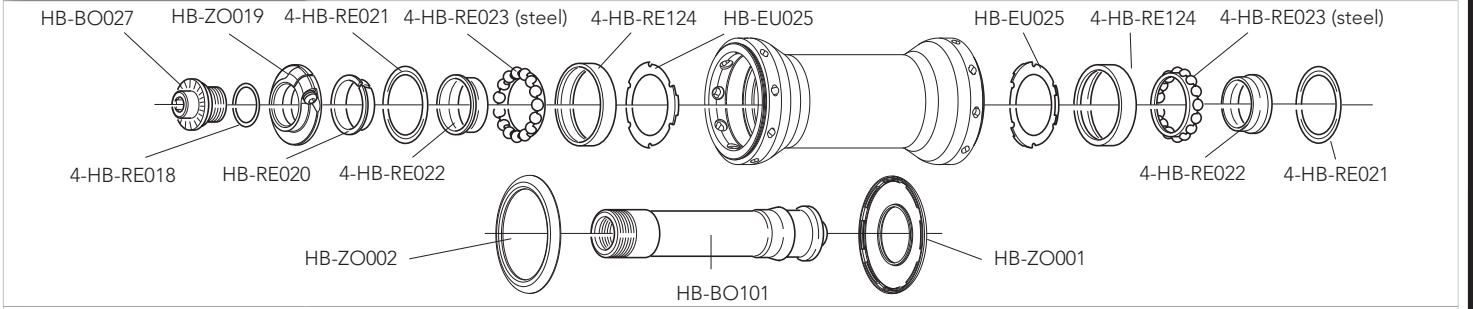

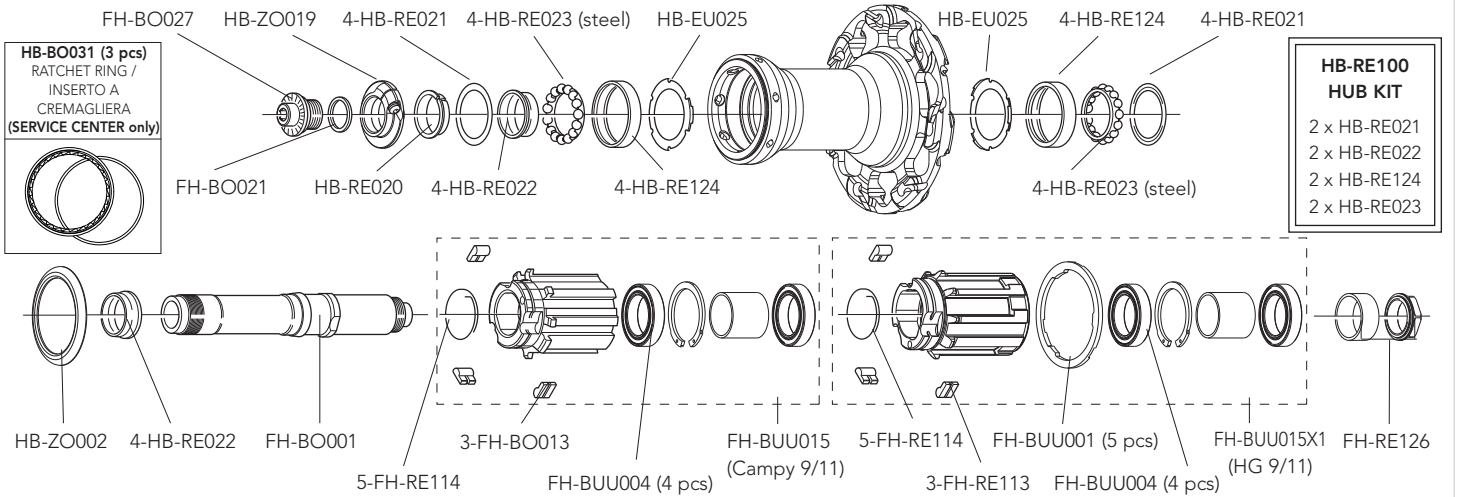

QUICK-RELEASES	QR11-20FRB	front + rear

SCIROCCO H35

CLINCHER

RIM

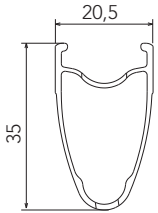	RIM-TAPE LABEL KIT VALVE HOLE DIAMETER	2-WH-RT02 (2 pieces) LAB-SCCB13 (for a pair of front+rear wheels) 6,5 mm 700C (622 x 15C)

SPOKES

FRONT SPOKE REAR RH SPOKE REAR LH SPOKE	WH-016SCC WH-018SCC WH-019SCC	4 spokes + 4 nipples 4 spokes + 4 nipples 4 spokes + 4 nipples

ACCESSORIES

Spacer for HG11 FW body	FH-BUU001	5 pcs - to be used only with 9/10s sprockets *(please note that every HG11 rear wheel/HG11 FW body package contains the spacer)*

HUBS

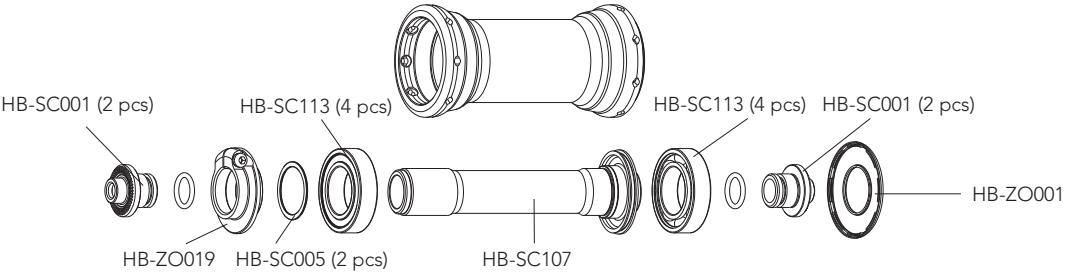

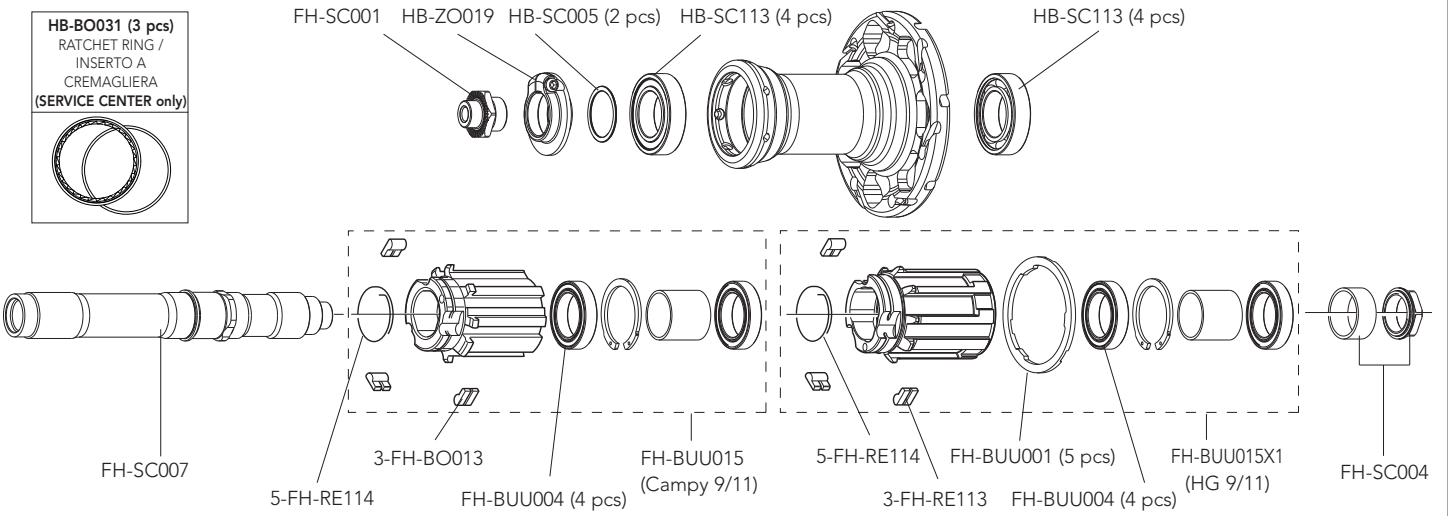

QUICK-RELEASES	QR12-ZOBFR	front + rear

VENTO ASYMMETRIC G3

CLINCHER

RIM

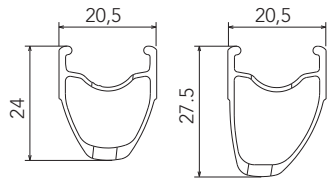

RIM-TAPE		2-WH-RT02 (18 mm - 2 pieces)
LABEL KIT		LAB-VECB14G3 (for a pair of front+rear wheels)
VALVE HOLE		6,5 mm
DIAMETER		700C (622 x 15C)

SPOKES

FRONT/REAR RIGHT SPOKE	WH-016VEC	4 spokes + 4 nipples
REAR LH SPOKE	WH-119VEC	4 spokes + 4 nipples
NIPPLES	WH-NVE	50 pcs

ACCESSORIES

Spacer for HG11 FW body	FH-BUU001	5 pcs - to be used only with 9/10s sprockets *(please note that every HG11 rear wheel/HG11 FW body package contains the spacer)*

HUBS

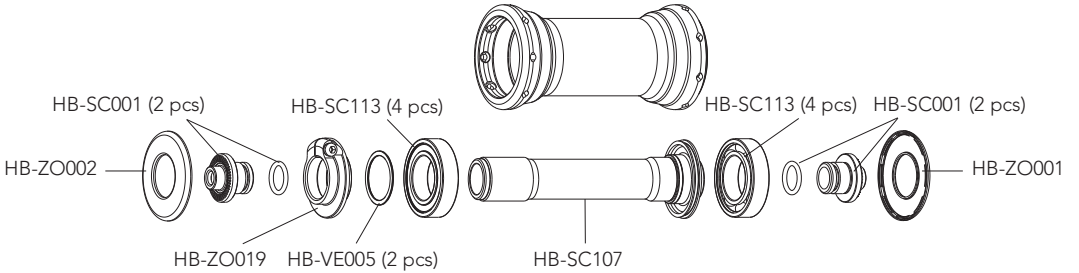

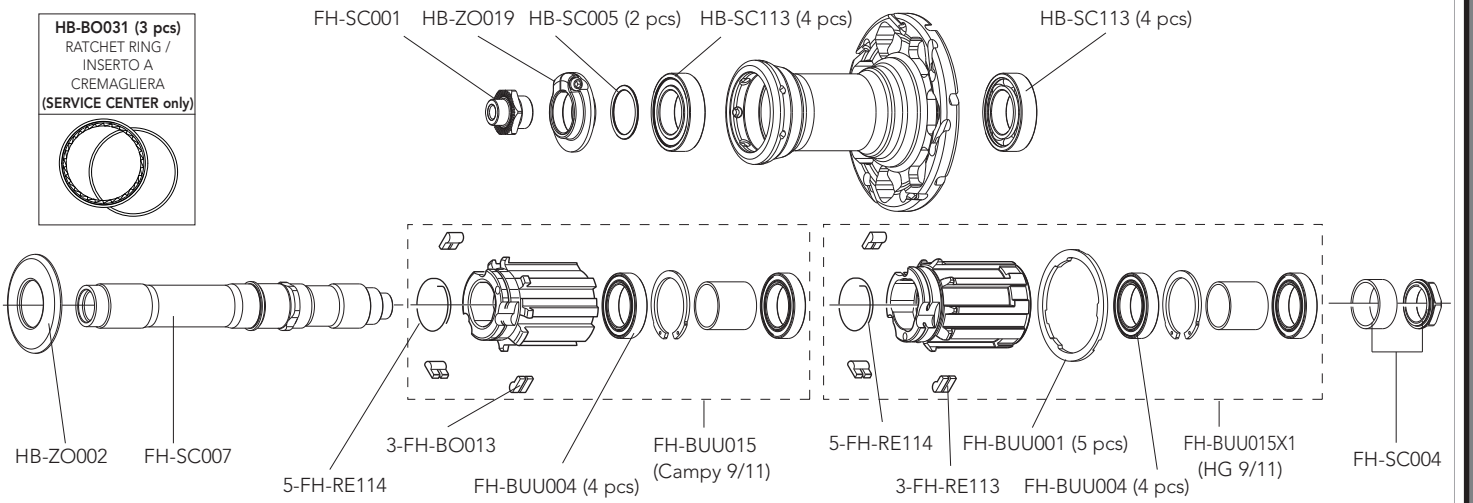

QUICK-RELEASES	QR8-40BFR	front + rear

KHAMSIN ASYMMETRIC

CLINCHER

RIM

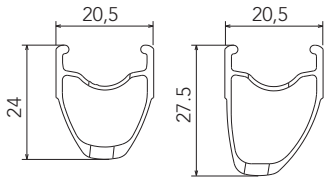

RIM-TAPE	2-WH-RT02 (18 mm - 2 pieces)
LABEL KIT	LAB-KHCB14 (BLACK - front+rear)
VALVE HOLE	6,5 mm
DIAMETER	700C (622 x 15C)

SPOKES

FRONT SPOKE	WH-016KHC	4 spokes + 4 nipples
REAR RH SPOKE	WH-018KHC	4 spokes + 4 nipples
REAR LH SPOKE	WH-019KHC	4 spokes + 4 nipples

ACCESSORIES

Spacer for HG11 FW body	FH-BUU001	5 pcs - to be used only with 9/10s sprockets *(please note that every HG11 rear wheel/HG11 FW body package contains the spacer)*

HUBS

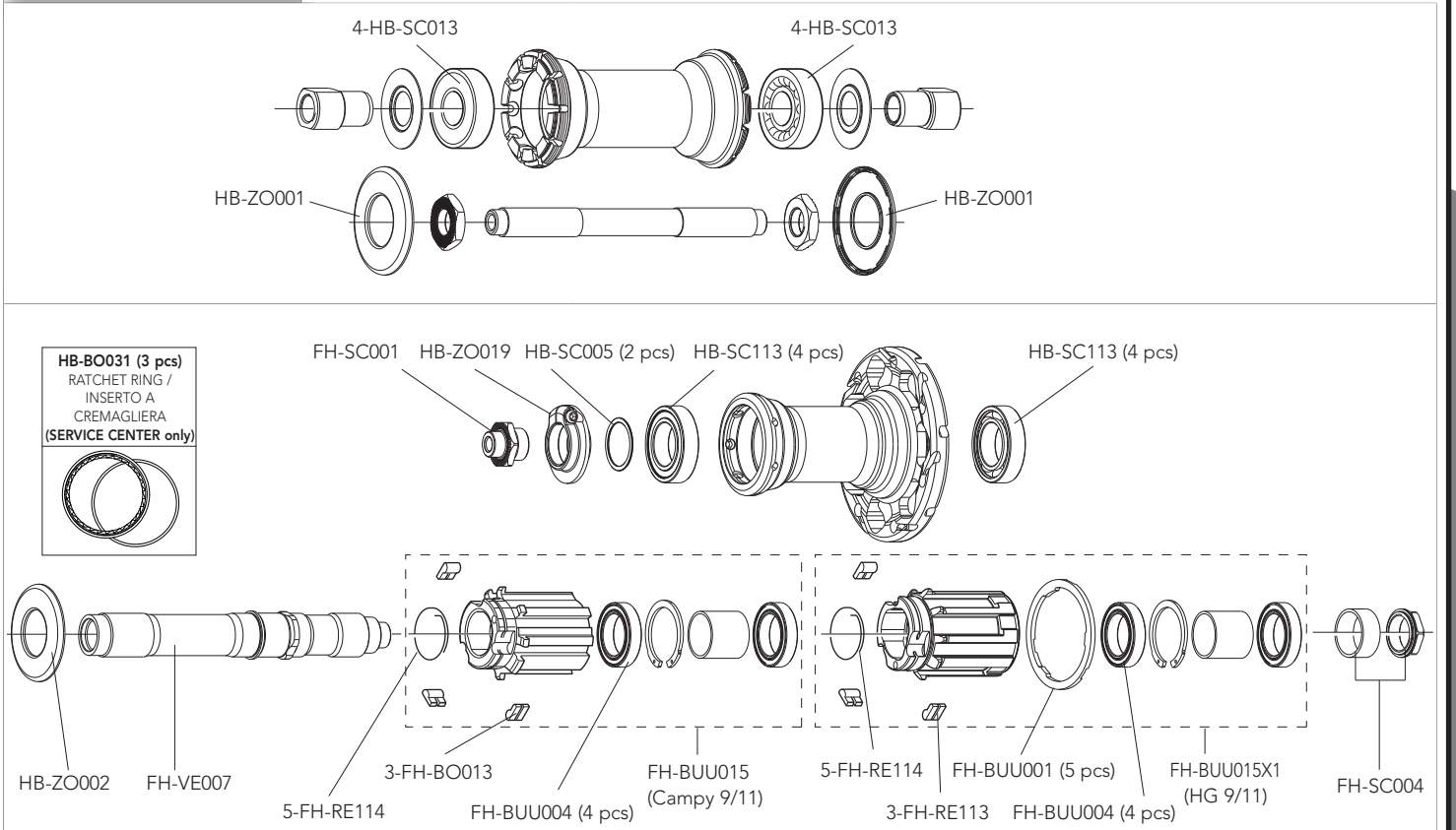

QUICK-RELEASES	QR8-40BFR	front + rear

KHAMSIN ASYMMETRIC G3

CLINCHER

RIM

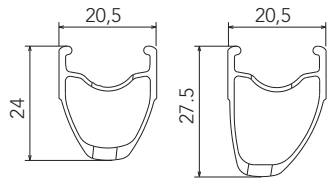

RIM-TAPE	2-WH-RT02 (18 mm - 2 pieces)
LABEL KIT	LAB-KHCB14G3 (BLACK - front+rear)
VALVE HOLE	6,5 mm
DIAMETER	700C (622 x 15C)

SPOKES

FRONT SPOKE	WH-016KHC	4 spokes + 4 nipples
REAR RH SPOKE	WH-018KHC	4 spokes + 4 nipples
REAR LH SPOKE	WH-119KHC	4 spokes + 4 nipples

ACCESSORIES

Spacer for HG11 FW body	FH-BUU001	5 pcs - to be used only with 9/10s sprockets *(please note that every HG11 rear wheel/HG11 FW body package contains the spacer)*

HUBS

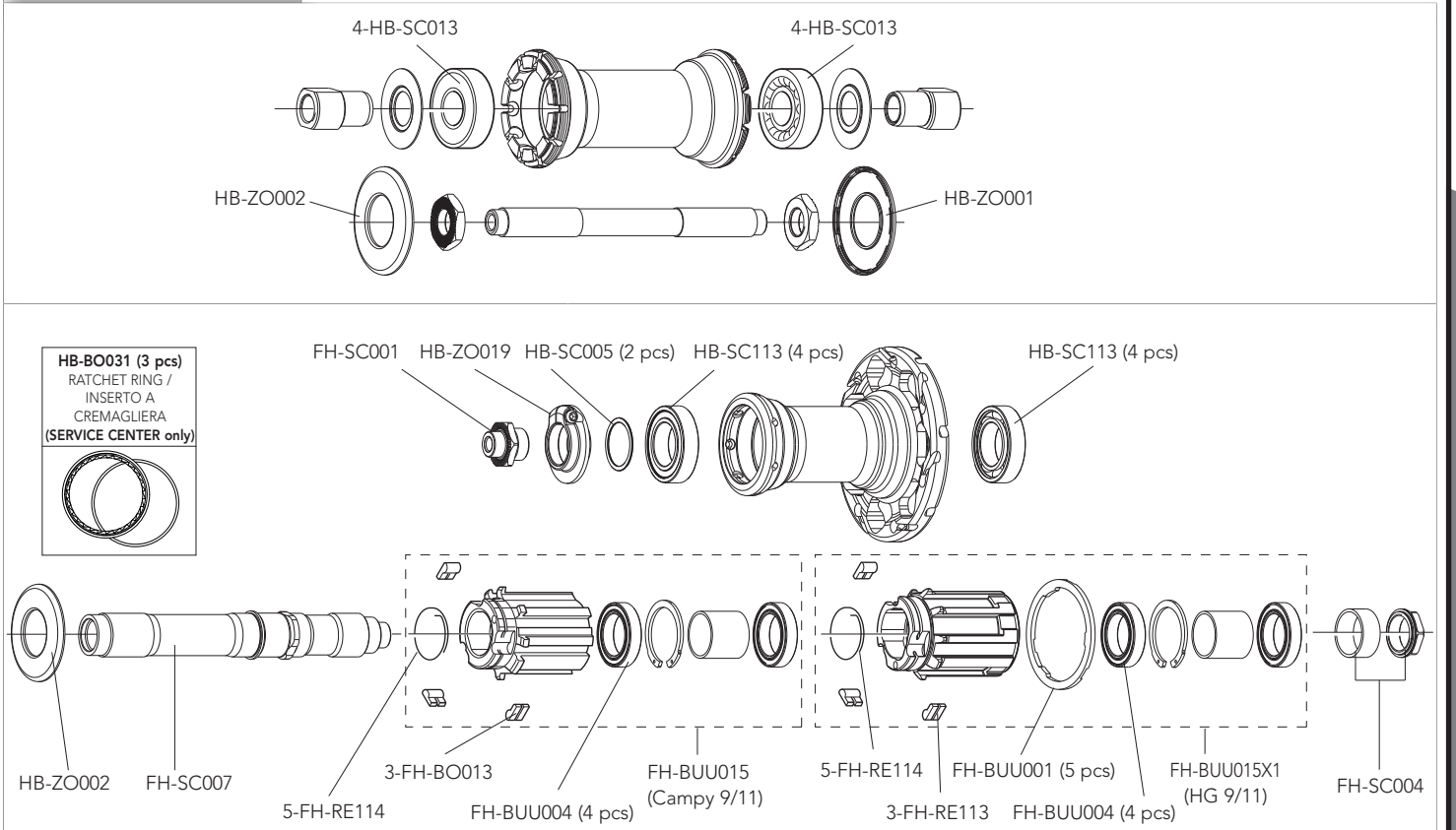

QUICK-RELEASES	QR8-40BFR	front + rear

NEUTRON ULTRA

CLINCHER

RIM

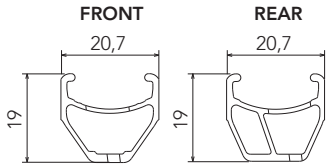

FRONT RIM	WH-403NE (with labels)
REAR RIM	WH-404NE (with labels)
RIM-TAPE	2-WH-RT02 (18 mm - 2 pieces)
LABEL KIT	LAB-NECC07 (for a pair of front+rear wheels)
VALVE HOLE	6,5 mm
DIAMETER	700C (622 x 15C)

SPOKES

COMPLETE FRONT KIT	KIT-33NE	22 front spokes + 22 nuts + 22 nut supporting plates
COMPLETE REAR KIT	KIT-34NE	12 rear right spokes +12 rear left spokes + 24 nuts + 24 nut supporting plates
MINI-KIT	KIT-500NE	2 front spokes + 2 rear right spokes + 2 rear left spokes + 6 nuts + 6 nut supporting plates
NUTS	10-WH-010BO	10 pieces
NUT SUPPORTING PLATES	10-WH-011EU	10 pieces

ACCESSORIES

Spacer for HG11 FW body	FH-BUU001	5 pcs - to be used only with 9/10s sprockets *(please note that every HG11 rear wheel/HG11 FW body package contains the spacer)*

HUBS

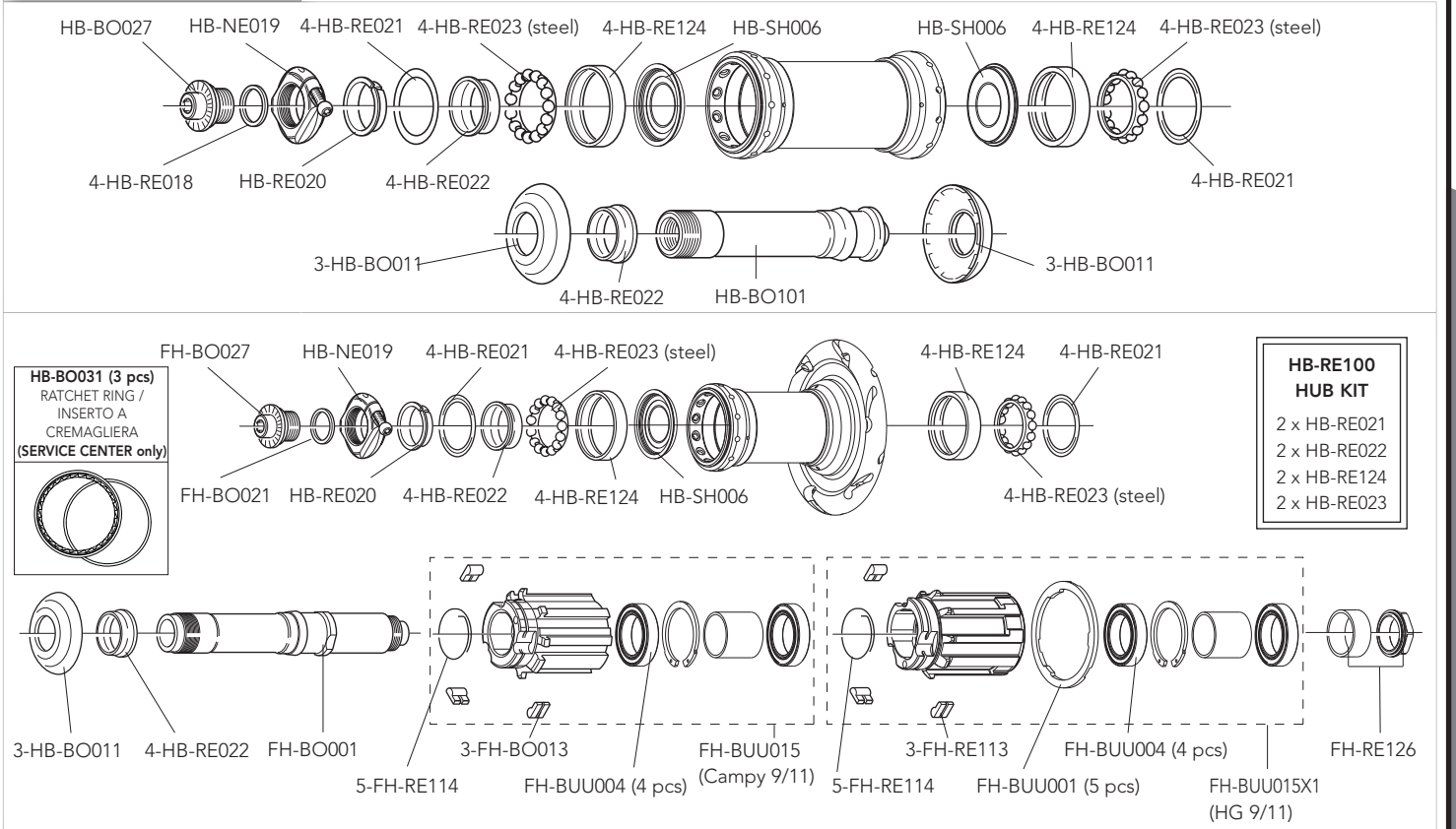

QUICK-RELEASES	QR11-20FRB	front + rear

SCIROCCO H35 CX

CLINCHER

RIM

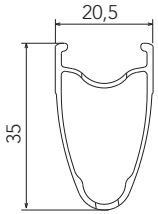

RIM-TAPE	2-WH-RT02 (18 mm - 2 pieces)
LABEL KIT	LAB-SCXCB13 (for a pair of front+rear wheels)
VALVE HOLE DIAMETER	6,5 mm
	700C (622 x 15C)
	These wheels are designed to mount cyclo-cross up to 35 mm tyres. We highly recommend complying with maximum pressures indicated on cyclo-cross tyres. Do no use 29" MTB tyres.

SPOKES

FRONT SPOKE	WH-016SCC	4 spokes + 4 nipples
REAR RH SPOKE	WH-018SCC	4 spokes + 4 nipples
REAR LH SPOKE	WH-019SCC	4 spokes + 4 nipples

ACCESSORIES

Spacer for HG11 FW body	FH-BUU001	5 pcs - to be used only with 9/10s sprockets *(please note that every HG11 rear wheel/HG11 FW body package contains the spacer)*

HUBS

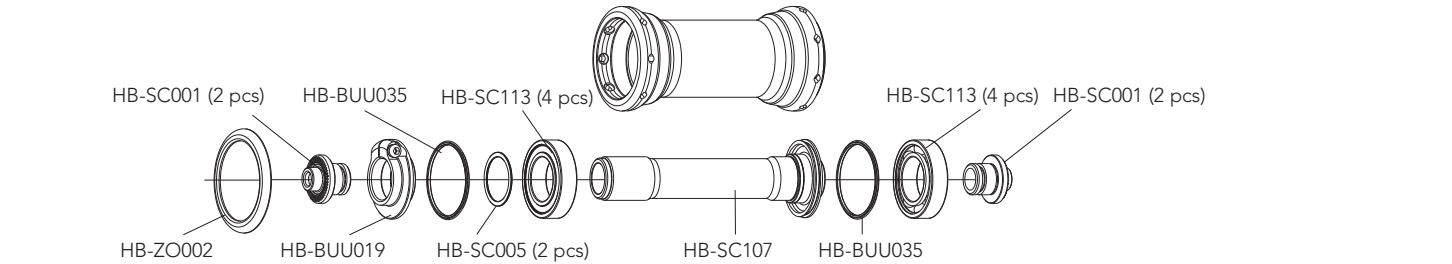

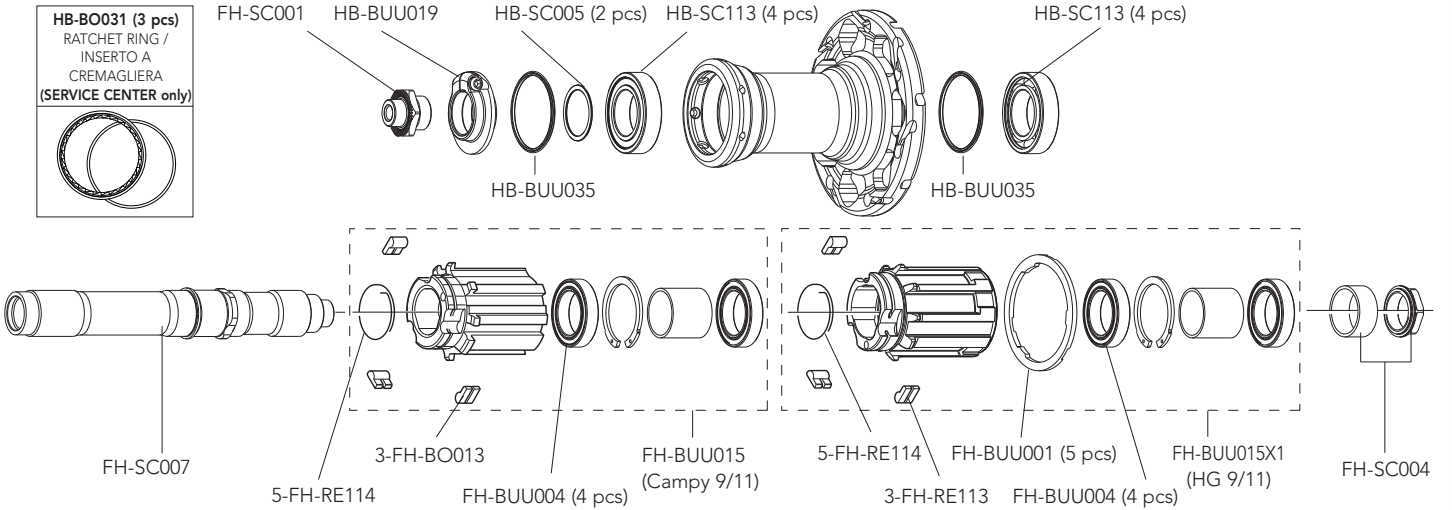

QUICK-RELEASES	QR12-ZOBFR	front + rear

KHAMSIN ASYMMETRIC CX

CLINCHER

RIM

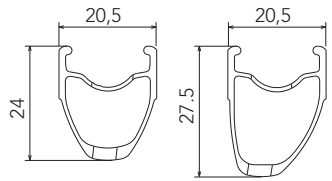

RIM-TAPE	2-WH-RT02 (18 mm - 2 pieces)
LABEL KIT	LAB-KHCXB14 (BLACK - front+rear)
VALVE HOLE DIAMETER	6,5 mm
	700C (622 x 15C)
	These wheels are designed to mount cyclo-cross up to 35 mm tyres. We highly recommend complying with maximum pressures indicated on cyclo-cross tyres. Do no use 29" MTB tyres.

SPOKES

FRONT SPOKE	WH-016KHC	4 spokes + 4 nipples
REAR RH SPOKE	WH-018KHC	4 spokes + 4 nipples
REAR LH SPOKE	WH-019KHC	4 spokes + 4 nipples

ACCESSORIES

Spacer for HG11 FW body	FH-BUU001	5 pcs - to be used only with 9/10s sprockets *(please note that every HG11 rear wheel/HG11 FW body package contains the spacer)*

KHAMSIN ASYMMETRIC CX

CLINCHER

HUBS

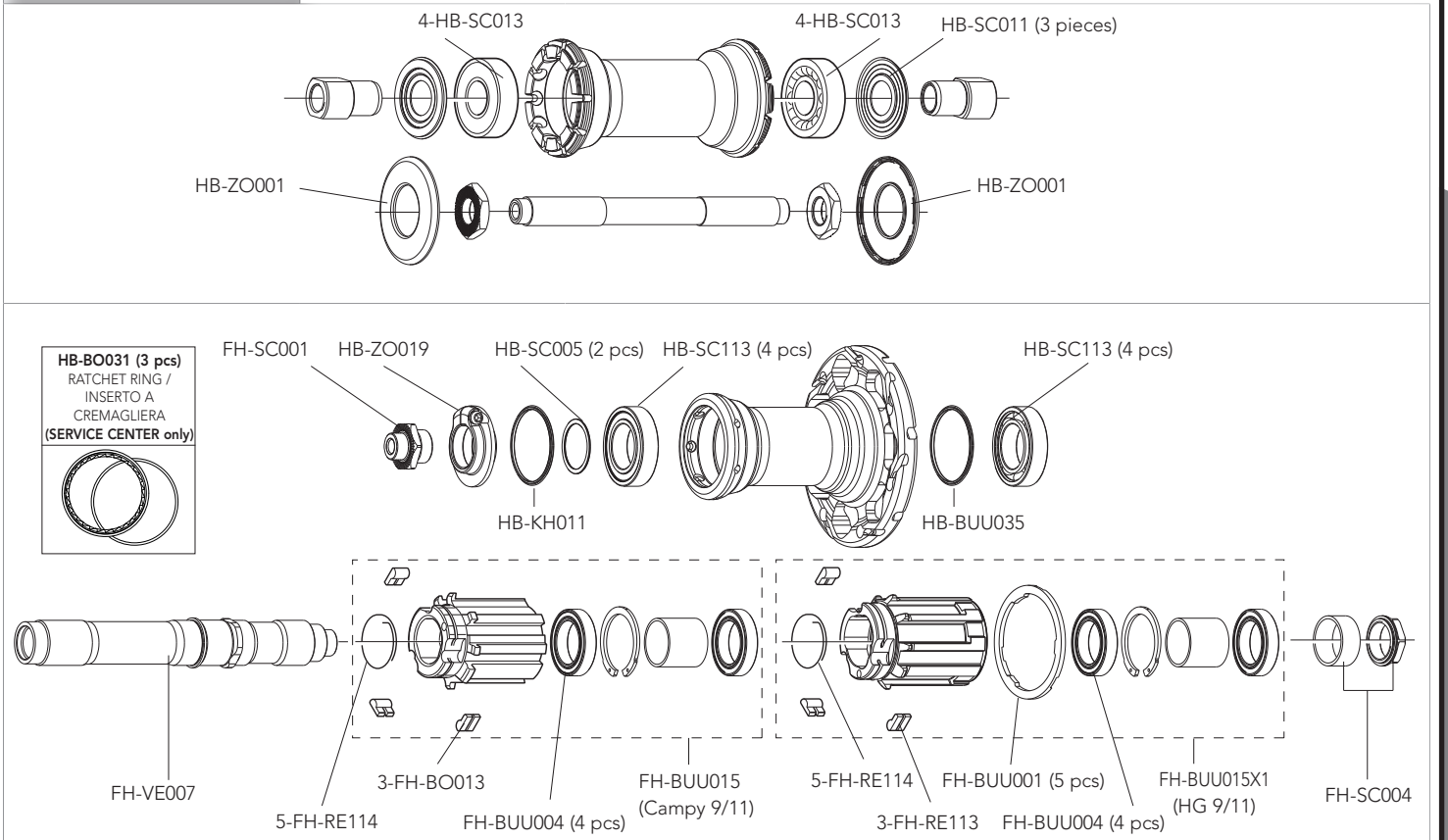

QUICK-RELEASES	QR8-40BFR	front + rear

PISTA

TUBULAR

RIM

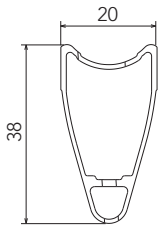

FRONT RIM	WH-001PI (with labels)
REAR RIM	WH-002PI (with labels)
LABEL KIT	LAB-PIT07 (for a pair of front+rear wheels)
VALVE HOLE	6,5 mm
VALVE EXTENSION	UT-HU100
DIAMETER	634 mm

SPOKES

COMPLETE FRONT KIT	KIT-01PI	22 front spokes + 22 nuts + 22 nut supporting plates
COMPLETE REAR KIT	KIT-02PI	24 rear spokes + 24 nuts + 24 nut supporting plates
MINI-KIT	KIT-100PI	3 front spokes + r3 ear spokes + 6 nuts + 6 nut supporting plates
NUTS	10-WH-010BO	10 pieces
NUT SUPPORTING PLATES	10-WH-011EU	10 pieces

HUBS

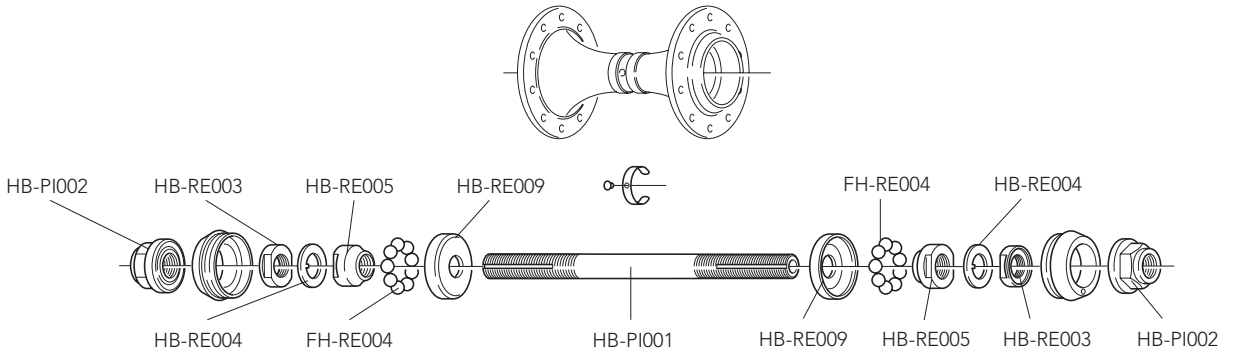
HB-PI002
HB-RE003
HB-RE005
HB-RE009
FH-RE004
HB-RE004
HB-RE004
FH-RE004
HB-PI001
HB-RE009
HB-RE005
HB-RE003
HB-PI002

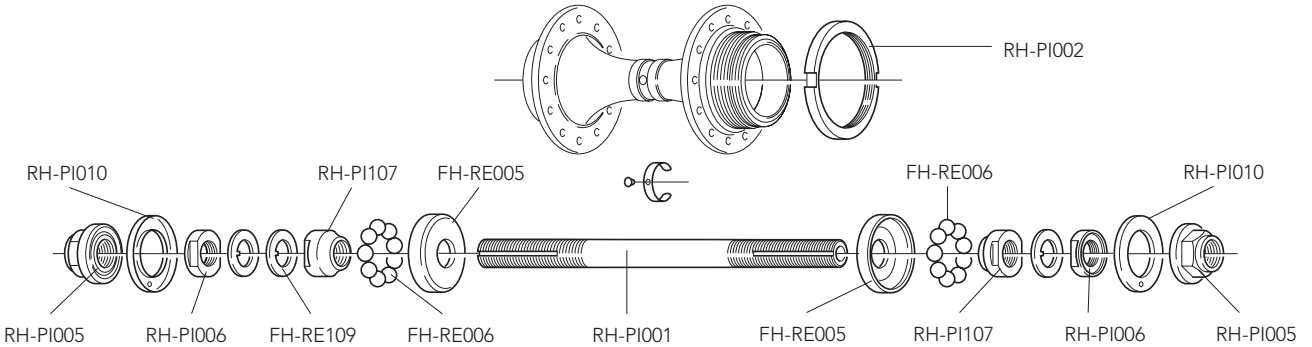
RH-PI002
RH-PI010
RH-PI107
FH-RE005
FH-RE006
RH-PI010
RH-PI005
RH-PI006
FH-RE109
FH-RE006
RH-PI001
FH-RE005
RH-PI107
RH-PI006
RH-PI005

BORA ULTRA TT

TUBULAR

RIM

LABEL	LAB-BOT15TT
VALVE HOLE STICKERS	WH-100BOTT (5 pcs)
VALVE HOLE BUSHINGS	WH-BUU002
VALVE EXTENSION	UT-HU130M
BRAKE SHOES	for carbon rims - BR-BO500 (for brakes with retention spring or interference fixing) - BR-BO500X (for brakes with screw fixing)

HUBS

REAR ROAD

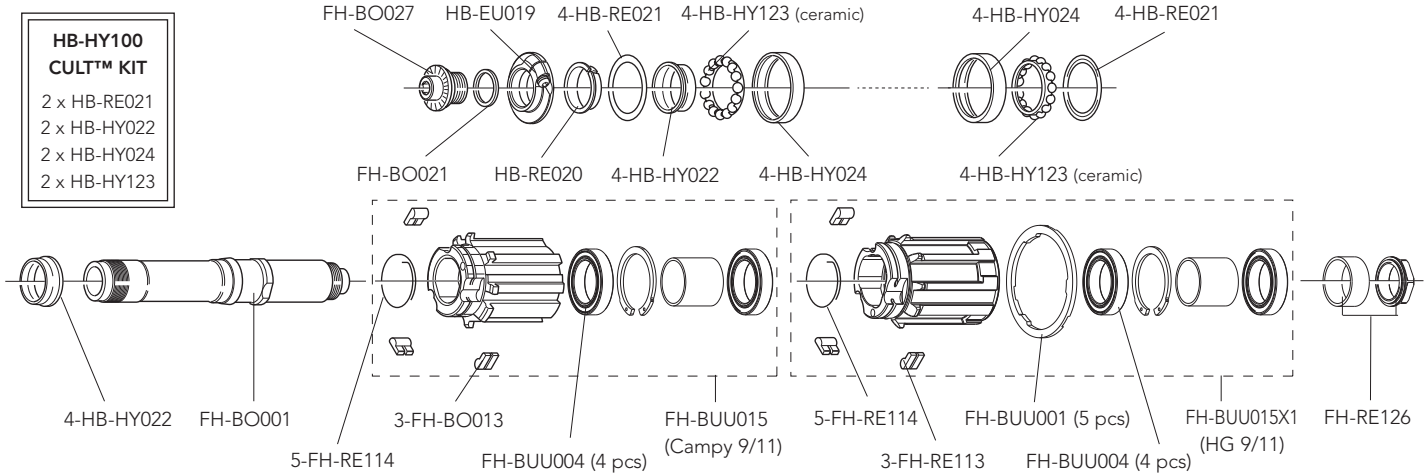

QUICK-RELEASES	QR12-BUUBFR	front + rear

HUBS

FRONT TRACK

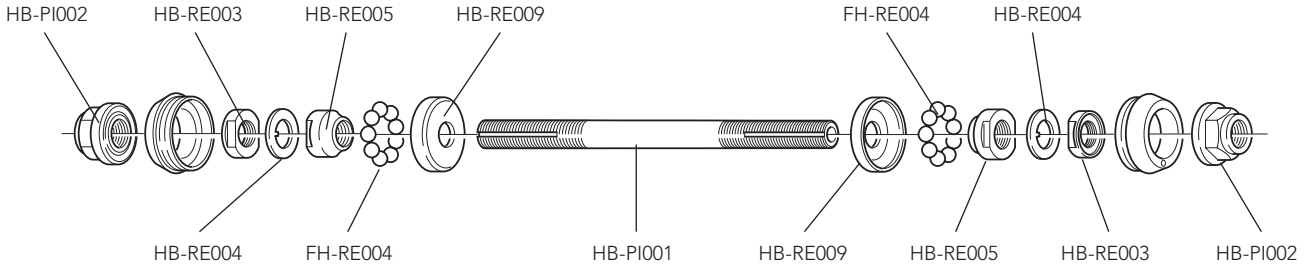

REAR TRACK

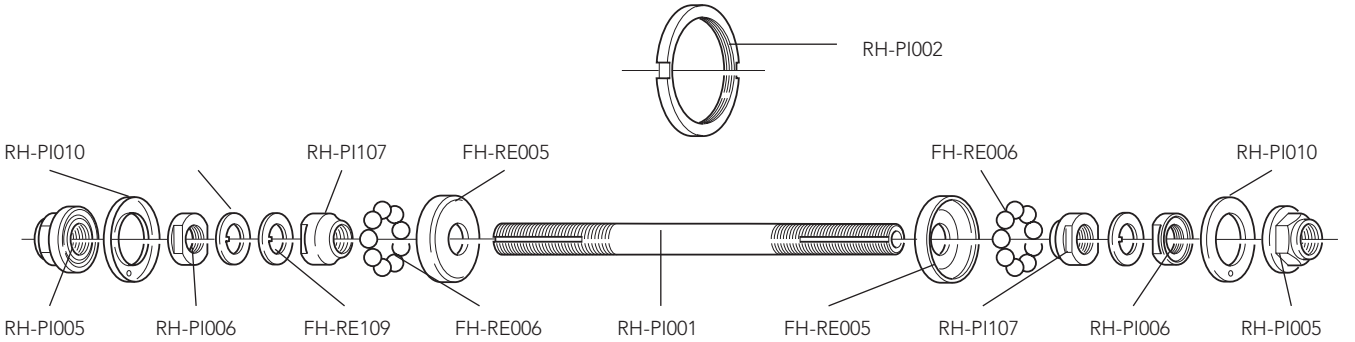

QUICK RELEASE

LOW-PROFILE WHEELS					
NEUTRON™ ULTRA™			QR11-20FRB		
HYPERON™ ULTRA™ Two				QR12-BUUBFR	
MEDIUM-PROFILE WHEELS					
KHAMSIN™ ASYMMETRIC™	QR8-40BFR				
VENTO™ ASYMMETRIC™	QR8-40BFR				
SCIROCCO™ 35		QR12-ZOBFR			
ZONDA™		QR12-ZOBFR			
EURUS™			QR11-20FRB		
SHAMAL™ ULTRA™			QR11-20FRB		
ZONDA™ 2-Way Fit™			QR11-20FRB		
EURUS™ 2-Way Fit™			QR11-20FRB		
SHAMAL™ ULTRA™ 2-Way Fit™			QR11-20FRB		
SHAMAL™ MILLE					QR13-80FR
ALU/CARBON HIGH-PROFILE WHEELS					
BULLET™		QR12-ZOBFR			
BULLET™ ULTRA™				QR12-BUUBFR	
CARBON HIGH-PROFILE WHEELS					
BORA™ One				QR12-BUUBFR	
BORA™ One 35				QR12-BUUBFR	
BORA™ ULTRA 35				QR12-BUUBFR	
BORA™ ULTRA™ Two				QR12-BUUBFR	
BORA™ ULTRA™ 80				QR12-BUUBFR	
CX WHEELS					
KHAMSIN™ ASYMMETRIC™ CX	QR8-40BFR				
SCIROCCO™ 35 CX		QR12-ZOBFR			

VALVE EXTENSIONS

Your BULLET/BULLET ULTRA/BORA ULTRA 80 wheels are supplied with valve extensions that correspond to depth of the rim as follows:

PROFILE RIM	MALE VALVE ADAPTER (SUPPLIED)		
BULLET/BULLET ULTRA H50	UT-WH130M	L = 35 mm	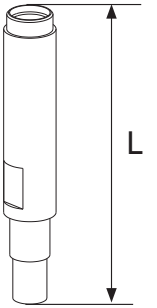
BULLET/BULLET ULTRA H80	UT-WH140M	L = 65 mm	
BULLET/BULLET ULTRA H105	UT-WH150M	L = 90 mm	
BORA ULTRA H50	UT-HU150	L = 40 mm	
BORA ULTRA H80	UT-WH160M	L = 74 mm	

PROFILE RIM	FEMALE VALVE ADAPTER (OPTION)		
BULLET/BULLET ULTRA H50	UT-WH130F	L = 37 mm	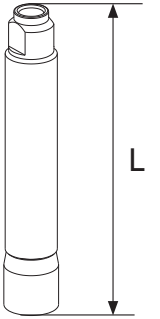
BULLET/BULLET ULTRA H80	UT-WH140F	L = 67 mm	
BULLET/BULLET ULTRA H105	UT-WH150F	L = 92 mm	
BORA ULTRA H80	UT-WH160F	L = 80 mm	

USE AIR CHAMBERS (INNER TUBES) WITH A LONG VALVE (AT LEAST 35 mm).

2015 BRAKE PADS COMPATIBILITY TABLE

BRAKE PADS HOLDER	RIM WITH CARBON BRAKING RIM	RIM WITH P.E.O. COATED BRAKING RIM	RIM WITH ALUMINIUM BRAKING RIM
	RED BRAKE PADS	BLUE BRAKE PADS	BLACK BRAKE PADS
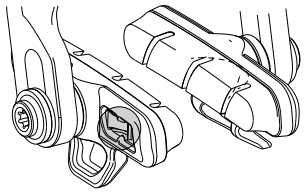 FIXING OF THE BRAKE PAD WITH RETENTION SPRING	BR-BO500	BR-PEO500	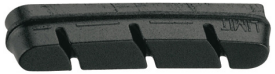 BR-SR500 / BR-RE700
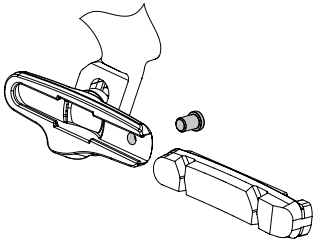 FIXING OF THE BRAKE PAD WITH SCREWS	BR-BO500X	BR-PEO500X	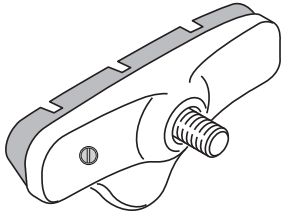 BR-VL040B (Black) BR-VL040S (Silver)
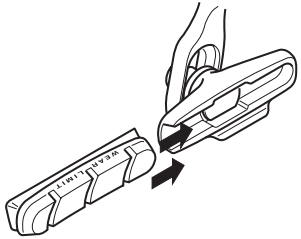 FIXING OF THE BRAKE PAD BY INTERFERENCE	BR-BO500	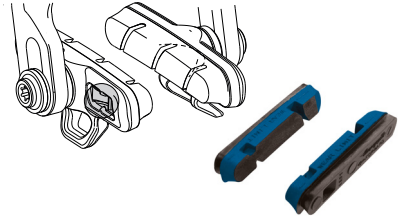 BR-SR040 (Black) + BR-PEO500	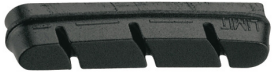 BR-RE700

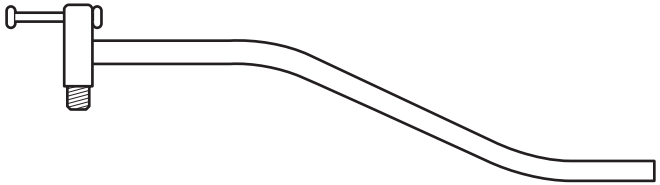

UT-VS030
Riscontro allineamento occhiello attacco cambio
Rear derailleur hanger alignment tool
Calibre de contrôle attache de dérailleur arrière
Richtwerkzeug zur Kontrolle von Ausfallende mit Schaltauge

UT-FD020
Dima per corretto posizionamento deragliatore (2 pz - per Z50 e Z52)
Front derailleur alignment tool (2 pcs - for Z50 and Z52)
Calibre de contrôle montage du dérailleur avant (2 pcs - pour Z50 et Z52)
Richtwerkzeug für Umwerfer-Montage (2 St. - für Z50 und Z52)

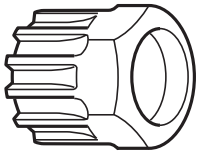

UT-BB080 (1 pz.) **- 10-UT-BB080** (10 pz.)**:**
Chiave per montaggio movimenti centrali CART e ghiere di chiusura pacchi pignoni
Cartridge bottom bracket and sprocket cassette- lock ring remover
Clé pour montage jeux de pédalier CART et roues-libres à cassette
Schlüssel zur Montage von Patronen-Tretlager und Schließring für Freilaufzahnkranz

---

UT-BB100
Utensile per movimenti a cartuccia Daytona/Centaur™, Veloce™ e Mirage™
Tool for Daytona/Centaur™, Veloce™ and Mirage™ cartridge bottom bracket
Clé pour jeux de pédalier à cartouche Daytona/Centaur™, Veloce™ et Mirage™
Montageschlüssel für Daytona/Centaur™, Veloce™ und Mirage™ Patronen-Tretlager

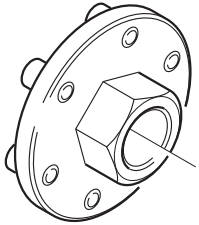

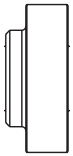

UT-FC090
Inserto per estrattore pedivella sinistra POWER TORQUE™
Insert for left POWER TORQUE™ crank extractor
Insert pour extracteur manivelle gauche POWER TORQUE™
Einsatz für linken POWER TORQUE™ Kurbelabzieher

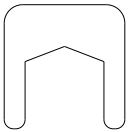

UT-FC095
Protezione per estrazione pedivella sx POWER TORQUE™ (5 pz)

shield f. left POWER TORQUE™ crank extractor insert (5 pcs)

écran insert extracteur manivelle gauche POWER TORQUE™ (5 pcs)

Schutz für Einsatz für LH POWER TORQUE™ Kurbelabzieher (5 St)

CRANKSET

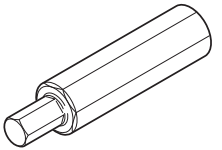

UT-BB110
Utensile per vite fissaggio guarnitura ULTRA-TORQUE™
Tool for ULTRA-TORQUE™ crankset fixing screw
Outil pour vis de fixation pédalier ULTRA-TORQUE™
Werkzeug für ULTRA-TORQUE™ Kettenradgarnitur Befestigungsschraube

UT-BB130
Chiave per calotte esterne guarnitura
Tool for crankset overboard cups
Outil pour cuvettes pédalier
Werkzeug für Kettenradgarnitur Lagerschalen

UT-BB140
Utensile per piantaggio calotte integrate OS-Fit™
Tool for OS-Fit™ crankset overboard cups
Outil pour cuvettes pédalier OS-Fit™
Werkzeug für OS-Fit™ Kettenradgarnitur Lagerschalen

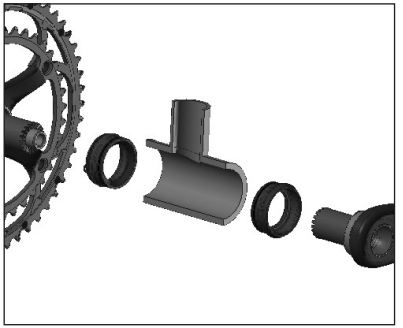

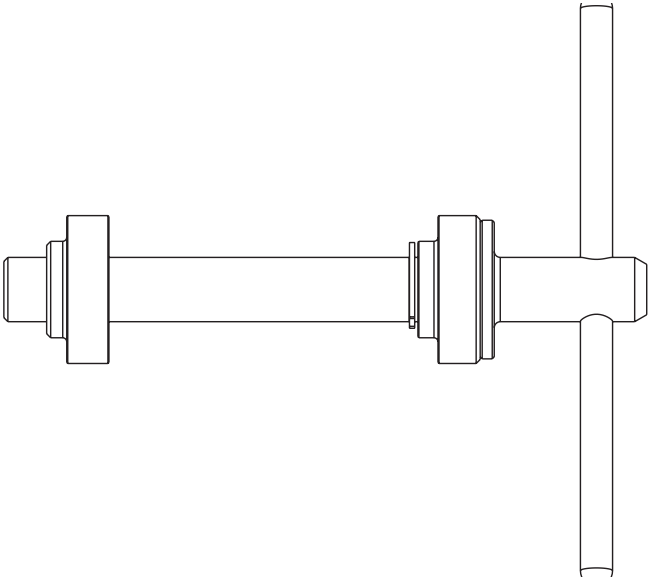

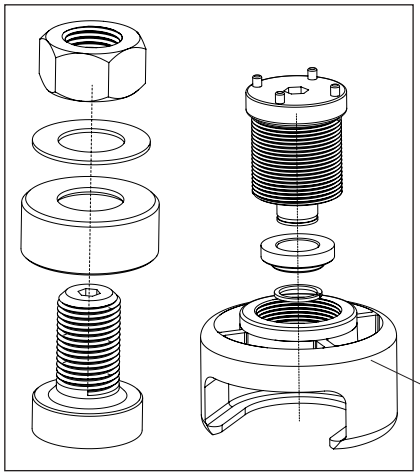

UT-FC220

Attrezzo montaggio/smontaggio guarniture OVER-TORQUE™
OVER-TORQUE™ crankset assembly & disassembly tool
Outil montage/démontage pédalier OVER-TORQUE™
Werkzeug für OVER-TORQUE™ Kettenradgarnitur Montage/ Demontage

UT-FC221

Corpo estrattore per attrezzo UT-FC120 e UT-FC220
Extractor body for UT-FC120 and UT-FC220
Corps exctracteur pour outil UT-FC120 e UT-FC220

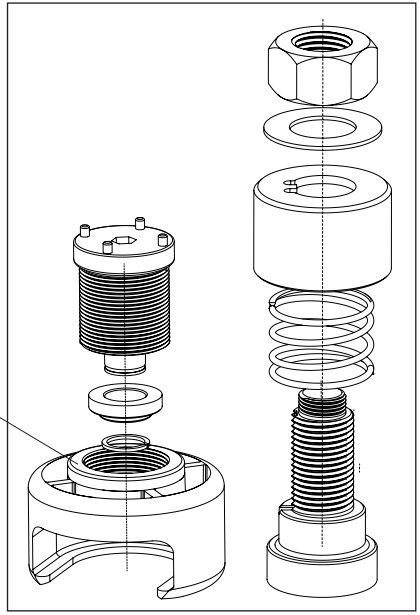

UT-FC120

Attrezzo montaggio/smontaggio guarniture OVER-TORQUE™ (per avvitatori automatici)
OVER-TORQUE™ crankset assembly & disassembly tool (industrial machine assist assembly tool)

UT-BB141

Adattatore OVER-TORQUE™ per utensile UT-BB140 per piantaggio calotte integrate

OVER-TORQUE™ adapter for tool UT-BB140 for crankset overboard cups

Adapteur OVER-TORQUE™ pour outil UT-BB140 pour cuvettes pédalier

Adapter-kit für OVER-TORQUE™ KRG für Werkzeug UT-BB140

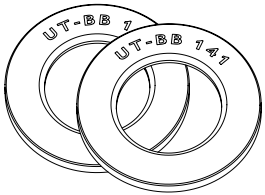

UT-BB150

Chiave per calotte esterne OVER-TORQUE™
Tool for OVER-TORQUE™ overboard cups
Outil pour cuvettes OVER-TORQUE™
Werkzeug für OVER-TORQUE™ Lagerschalen

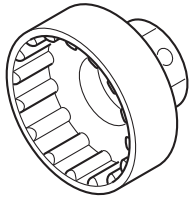

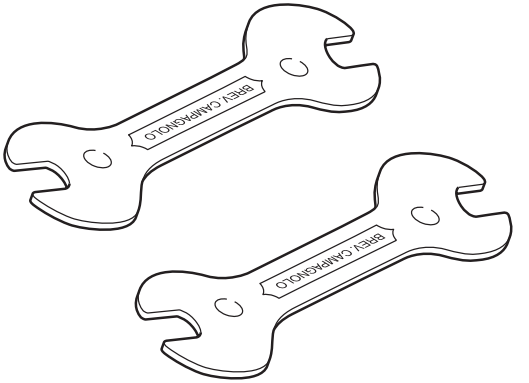

UT-BR010
Coppia chiavi 13-14 per registrazione freni e coni mozzi
Pair of 13-14 mm spanners for adjusting brakes and hub cones
Paire clés 13-14 pour réglage freins et cônes de moyeux
13-14 mm Schlüssel (2 Stücke) zum Einstellen von Bremsen und Nabelkonen

UT-HU050
Tiraraggi
Spoke wrench
Clé à rayons
Speichenschlüssel

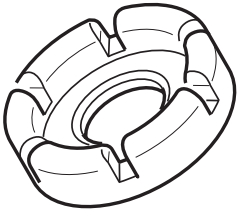

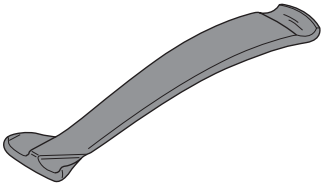

WH-109HYC (6 pcs.)
Leva in composito per rimozione copertoncino
Composite lever for removing clinchers
Démonte-pneus en composite
Reifenheber aus Verbundwerkstoff zum Abnehmen des Drahtreifens

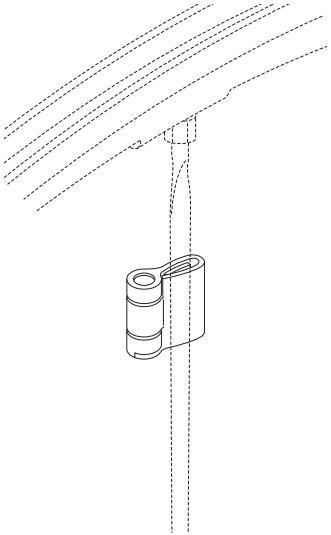

UT-WH080
Magnete velocità per raggi EURUS™ / SHAMAL™ ULTRA™

SPD magnet for EURUS™ / SHAMAL™ ULTRA™ spokes

Aimant vitesse pour rayons EURUS™ / SHAMAL™ ULTRA™

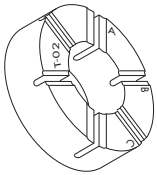

UT-WH010
Anello anti-rotazione raggi
Spoke antirotation ring
Bague antirotation des rayons

UT-WH020
Inserto nipplo attira-magnete per EURUS™/SHAMAL™ ULTRA™
Magnet-attracting nipple insert for EURUS™/SHAMAL™ ULTRA™
Insert d'écrou pour attirer l'aimant EURUS™/SHAMAL™ ULTRA™

UT-WH030
Inserto nipplo attira-magnete per ZONDA™ 06
Magnet-attracting nipple insert for ZONDA™ 06
Insert d'écrou pour attirer l'aimant ZONDA™ 06

UT-WH035
Inserto nipplo attira-magnete per ZONDA™ 2012
Magnet-attracting nipple insert for ZONDA™ 2012
Insert d'écrou pour attirer l'aimant ZONDA™ 2012

UT-WH160
Inserto nipplo attira-magnete per BULLET/BULLET ULTRA
Magnet-attracting nipple insert for BULLET/BULLET ULTRA
Insert d'écrou pour attirer l'aimant BULLET/BULLET ULTRA

UT-WH090
Chiave tiraraggi BULLET/BULLET ULTRA/BORA ULTRA 80

Spoke wrench BULLET/BULLET ULTRA/BORA ULTRA 80

Clé à rayons BULLET/BULLET ULTRA/BORA ULTRA 80

UT-WH070
Chiave tiraraggi
Spoke wrench
Clé à rayons

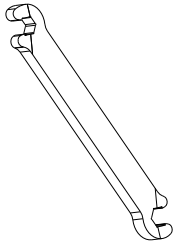

WHEELS

UT-WH050
Magnete guida-nipplo
Nipple guide magnet
Aimant de guidage écrou

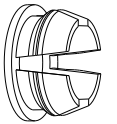

5-WH-SH002
Bussola riduzione sede valvola 2WF (5 pz)
Valve hole bushing for 2WF (5 pcs)
Bague pour valve 2WF (5 pcs)

WH-BUU002
Bussola riduzione sede valvola BULLET/BULLET ULTRA/BORA ULTRA 80 (5 pz)
Valve hole bushing for BULLET/BULLET ULTRA/BORA ULTRA 80 (5 pcs)
Bague pour valve BULLET/BULLET ULTRA/BORA ULTRA 80 (5 pcs)

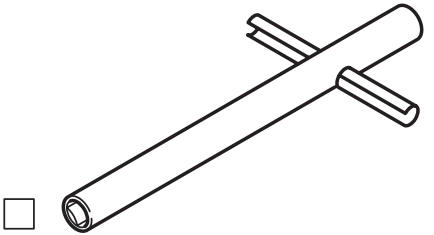

UT-HU060
Chiave per raggi ruote Bora™ (fino a gamma '02)
Bora™ wheel truing tool (till '02 range)
Clé à rayons pour Bor™a (jusqu'à la gamme '02)
Vierkant-Nippelspanner für Bora™ (bis '02 Produktlinie)

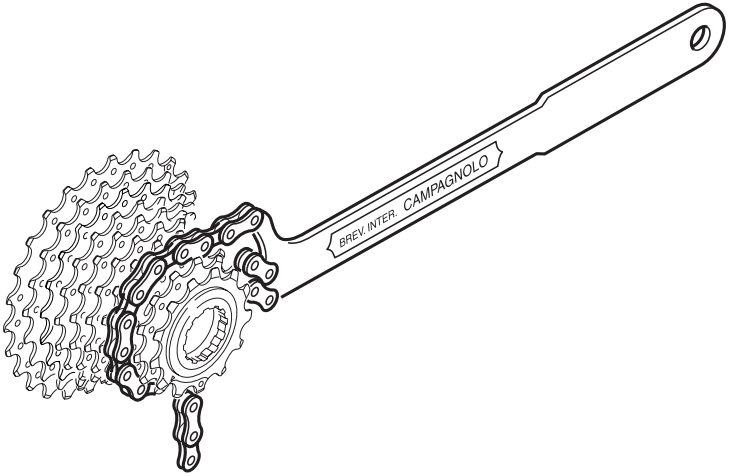

UT-CS060
Chiave con catena 10s per smontaggio pignoni 11s, 10s, 9s e 8s
Spanner with 10s chain for 11, 10, 9 and 8s sprockets
Fouet à chaine 10s pour pignons 11s, 10s, 9s et 8s
Zahnkranzabnehmer mit Rennkette 10s für 11-, 10-, 9- und 8s Ritzeln

UT-CN300

Utensile per ***Ultra-Link™*** (solo catene 11s)
Tool for ***Ultra-Link™*** (11s chains only)
Outil pour ***Ultra-Link™*** (seulement chaînes 11s)
Werkzeug für ***Ultra-Link™*** (nur 11s Kette)

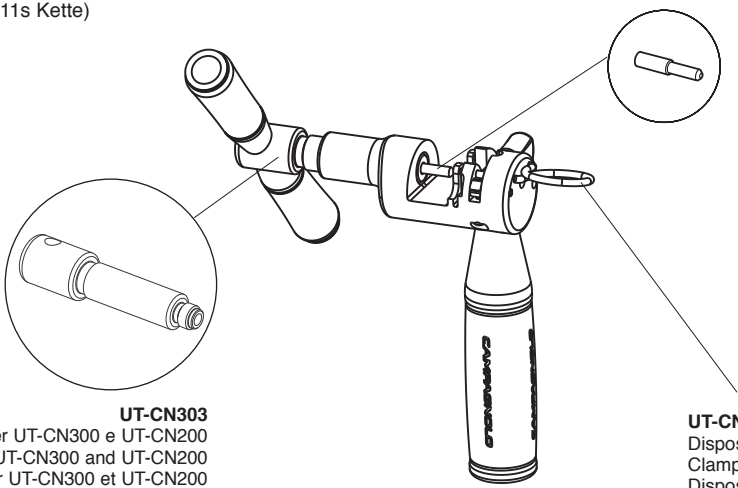

UT-CN301
Spintore per UT-CN300 e UT-CN200
Pusher for UT-CN300 and UT-CN200
Poinçon pour UT-CN300 et UT-CN200
Schieber für UT-CN300 und UT-CN200

UT-CN303
Perno centrale per UT-CN300 e UT-CN200
Central axle for UT-CN300 and UT-CN200
Axe central pour UT-CN300 et UT-CN200
Achse für UT-CN300 und UT-CN200

UT-CN302
Dispositivo di blocco per UT-CN300
Clamping device for UT-CN300
Dispositif de blocage pour UT-CN300
Sperrvorrichtung für UT-CN300

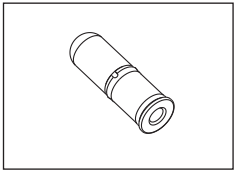

5-CN-RE500

Ultra-Link™ per catene 11s (5 pz)
Ultra-Link™ for 11s chains only (5 pcs)
Ultra-Link™ pour chaînes 11s (5 pcs)
Ultra-Link™ für 11s Kette (5 St.)

CAMPY™ UT-CN200

Utensile per ***HD-Link™*** (catene C10™ e C10™ Ultra Narrow™)
Tool for ***HD-Link™*** (C10™ and C10™ Ultra Narrow™ chains)
Outil pour ***HD-Link™*** (chaînes C10™ et C10™ Ultra Narrow™)
Werkzeug für ***HD-Link™*** (C10™ und C10™ Ultra Narrow™ Kette)

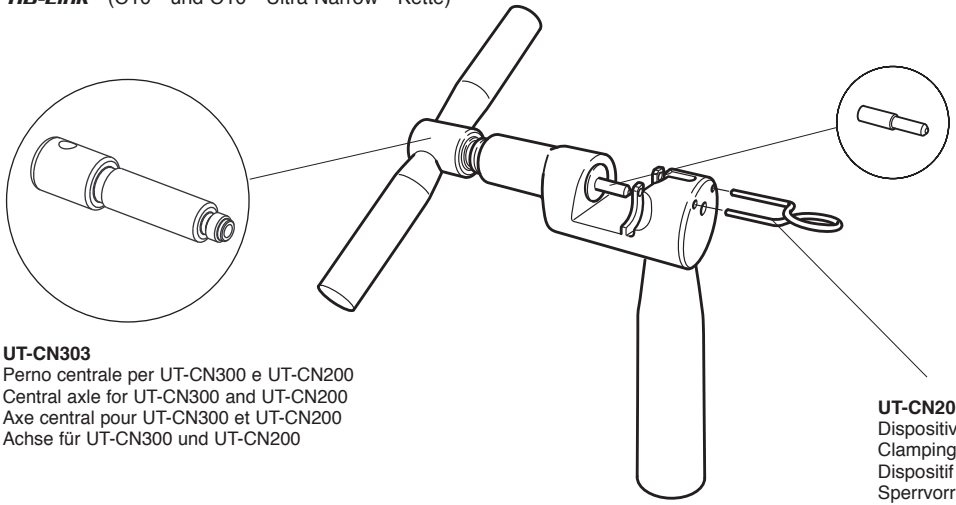

UT-CN301
Spintore per UT-CN300 e UT-CN200
Pusher for UT-CN300 and UT-CN200
Poinçon pour UT-CN300 et UT-CN200
Schieber für UT-CN300 und UT-CN200

UT-CN303
Perno centrale per UT-CN300 e UT-CN200
Central axle for UT-CN300 and UT-CN200
Axe central pour UT-CN300 et UT-CN200
Achse für UT-CN300 und UT-CN200

UT-CN202
Dispositivo di blocco per UT-CN200
Clamping device for UT-CN200
Dispositif de blocage pour UT-CN200
Sperrvorrichtung für UT-CN200

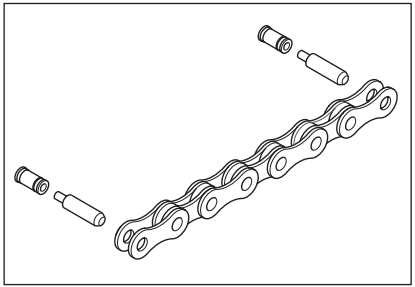

CN-RE400

HD-Link™ Ultra Narrow™ **(5,9 mm)** per catene C10™ Ultra Narrow™
HD-Link™ Ultra Narrow™ **(5,9 mm)** for C10™ Ultra Narrow™ chains
HD-Link™ Ultra Narrow™ **(5,9 mm)** pour chaines C10™ Ultra Narrow™ chains
HD-Link™ Ultra Narrow™ **(5,9 mm)** für C10™ Ultra Narrow™ Kette

EPS

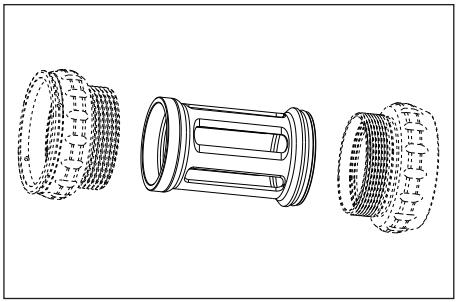

EPS-001
Cilindro guida-cavi

BB cable guide

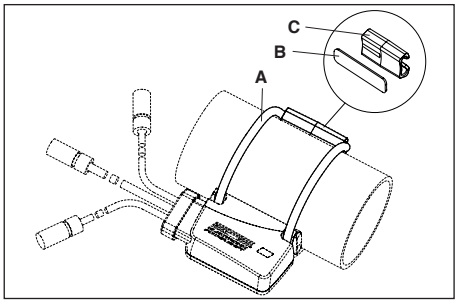

EPS-002
Accessori montaggio sistema di interfaccia (A+B+C)

Kit for interface assembly (A+B+C)

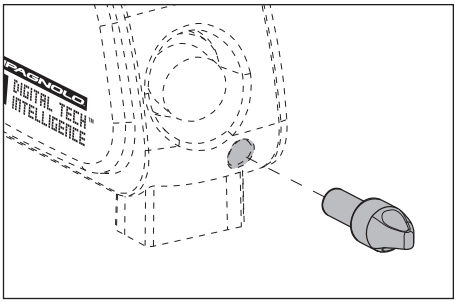

EPS-003
Magnete spegnimento sistema di potenza (5 pz.)

Switch-off magnet (5 pcs.)

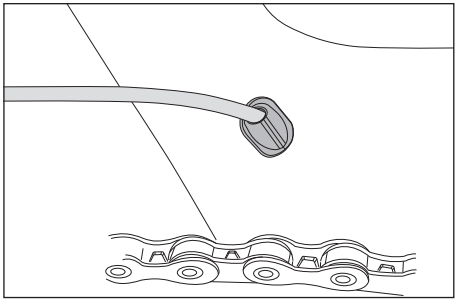

CG-CS001EPS
Gommino passacavi (20 pz.)
Grommet for cables (20 pcs.)

CG-CS002EPS
Gommino passacavi per Power Unit (10 pz.)
Grommet for Power Unit cables (20 pcs.)

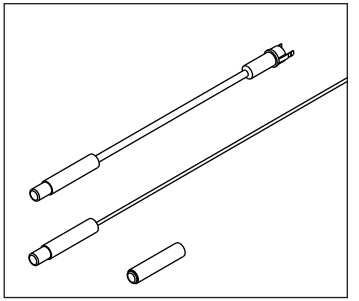

UT-CG010EPS
Kit magneti passacavi SR-RE
Cable run magnet kit SR-RE

UT-CG010ATEPS
Kit magneti passacavi AT
Cable run magnet kit AT

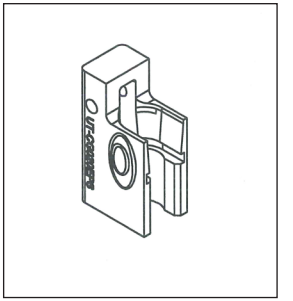

UT-CG020EPS
Attrezzo apri-connettori SR-RE

Connector disconnection tool SR-RE

UT-CG120ATEPS
Attrezzo apri-connettori AT

Connector disconnection tool AT

EPS V2 POWER UNIT

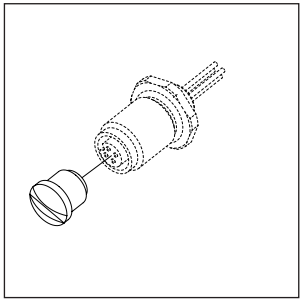

EPS-004
Tappo connettore carica batterie PU EPS V2 (5 pz)

PU EPS V2 connector cup (internal mount) (5 pcs)

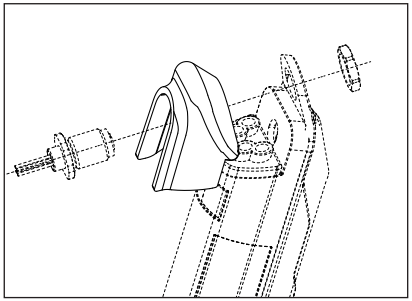

EPS-005
Cappuccio per installazione est. PU EPS V2 (5pz)

PU EPS V2 external mount conncetor cap (5pcs)

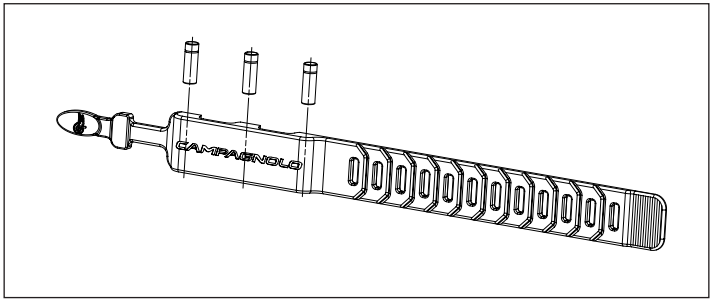

EPS-006
Fascia spegnimento magnetica

Magnetic power block strap

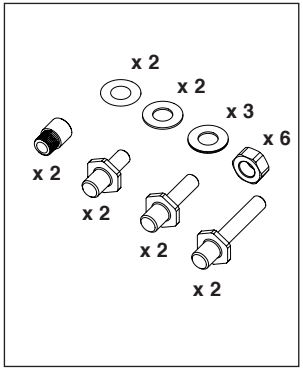

EPS-107
Kit viti Power Unit EPS V2

EPS V2 Power Unit screws kit

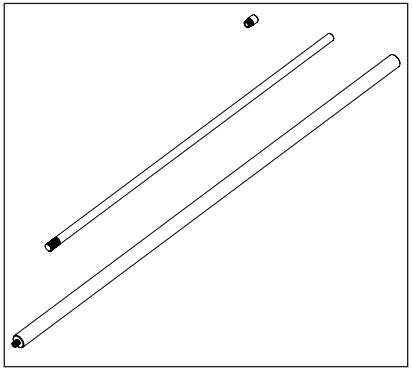

UT-PU010
Kit installazione interna PU EPS V2

EPS V2 PU internal installation tool

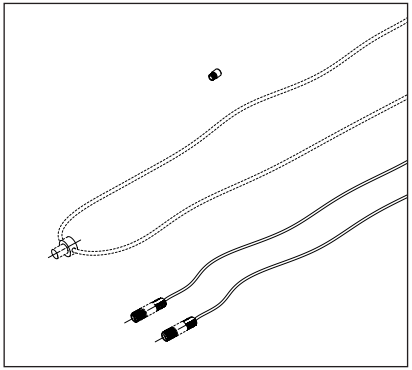

UT-PU030
Kit installazione tubo obliquo PU EPS V2

EPS V2 PU down-tube installation tool

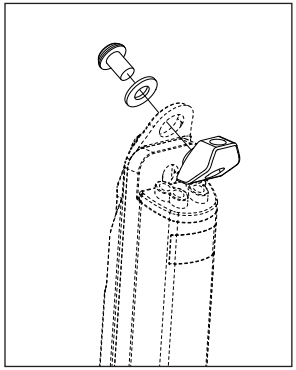

UT-PU020
Adattatore per installazione rovesciata PU EPS V2

EPS V2 PU internal upside-down installation adapter

BIG

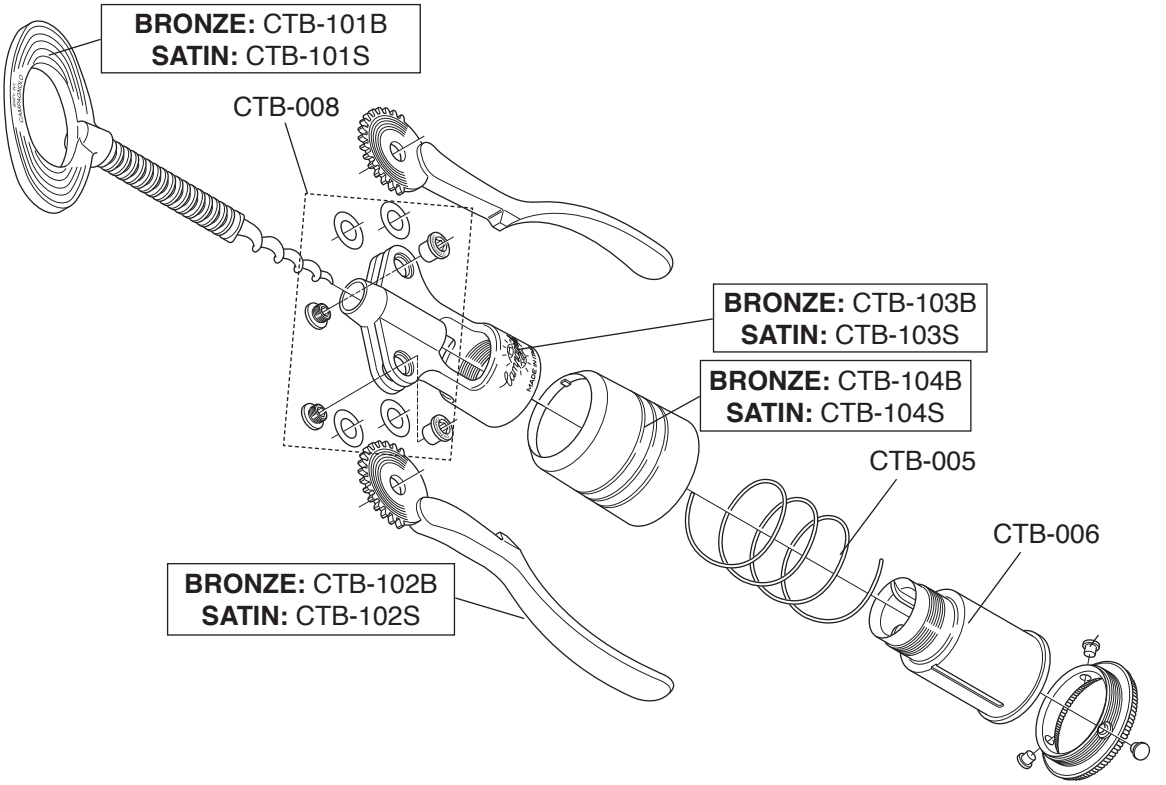
BRONZE: CTB-101B
SATIN: CTB-101S
CTB-008
BRONZE: CTB-103B
SATIN: CTB-103S
BRONZE: CTB-104B
SATIN: CTB-104S
CTB-005
CTB-006
BRONZE: CTB-102B
SATIN: CTB-102S

HEADQUARTERS

CAMPAGNOLO S.R.L.
Via della Chimica, 4
36100 Vicenza - ITALY
Tel. +39-0444-225500
Fax: +39-0444-225400
E-mail: sales@campagnolo.com

BRANCH OFFICES

FRANCE
CAMPAGNOLO FRANCE SAS
ZA du Tissot - 42530 St GENEST - LERPT
Tel. +33-477-556305
Fax: +33-477-556345
E-mail: campagnolo@campagnolo.fr

GERMANY
CAMPAGNOLO DEUTSCHLAND GMBH
Alte Garten 62
51371 LEVERKUSEN
Tel. +49-214-206953-0
Fax: +49-214-206953-15
E-mail: campagnolo@campagnolo.de

JAPAN
CAMPAGNOLO JAPAN LTD
65 Yoshida-cho, Naka-ku,
YOKOHAMA
231-0041
Tel. +81-45-264-2780
Fax: +81-45-241-8030
E-mail: info@campagnolo.jp

SPAIN
CAMPAGNOLO IBERICA S.L.
Avda. de Los Huetos 46. pab, 3-2ª fila
01010 VITORIA
Tel. +34-945-217195
Fax:+34-945-217198
E-mail: campagnolo@campagnolo.es

TAIWAN
PRIMATEK LTD
No. 4, Gongyequ 10th Rd., Nantue Dist.,
TAICHUNG CITY 408 - TAIWAN (R.O.C.)
Tel. +886-4-23506831
Fax:+886-4-23596764

UNITED STATES
CAMPAGNOLO NORTH AMERICA INC.
5431 Avenida Encinas, Suite C - CARLSBAD CA 92008 - U.S.A.
Tel. +1-760-9310106
Fax: +1-760-9310991
E-mail: info@campagnolona.com

AGENCIES

BENELUX
INTERNATIONAL
CYCLE CONNECTION I.C.C.
Communicatielaan 5A
4538 BV TERNEUZEN
NEDERLANDS
Tel. + 31 (0)115 649321
Fax: + 31 (0)115 649110
E-mail: info@i-c-c.nl
Web: www.i-c-c.nl

UNITED KINGDOM
SELECT CYCLE COMPONENTS
The White House
Main Street
NEWTON NI13 8HN - ENGLAND
Tel. +44-0780260628
E-mail: rosafio@selectcyclecompo-nents.com

code 7269564 - 11/2014 - © Campagnolo 2014